Core practical – Investigating resistance

Pearson Edexcel GCSE (9-1) Combined Science / Physics

Name _____ **Class** _____ **Date** _____

Your teacher may watch to see if you can:

- follow instructions to work safely.
- make accurate measurements.

Task 1 – Investigating resistance

Practical Objective

To investigate the relationship between potential difference, current and resistance for a resistor and a filament lamp.

Apparatus

- power supply
- ammeter
- connecting wires
- two crocodile clips
- voltmeter
- resistor
- two filament lamps

Safety

- Never use mains electricity for practical work with circuits.
- Ask your teacher to check your circuit before you switch it on.

Method

A Connect circuit X as shown in the diagram.

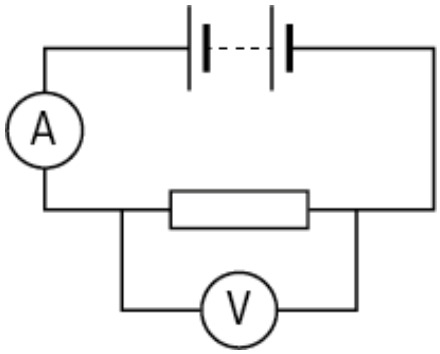

Circuit X

B Set the power pack to a potential difference of 1 *V* and switch it on. Record the readings on the ammeter and voltmeter in a table and then switch off the power.

C Repeat step **B** for settings on the power pack of 2 V, 3 V, 4 V, 5 V and 6 V.

D Replace the resistor in circuit X with a filament lamp. Repeat steps **B** and **C**.

© Pearson Education Ltd 2024. Copying permitted for purchasing institution only. This material is not copyright free.

Recording your results

1 Record your results for circuit X in the table below.

Potential difference (V)	Current (A)	
	Resistor	Filament lamp
0	0	0
1		
2		
3		
4		
5		
6		

Considering your results/conclusions

2 Plot a graph of your results. Plot the independent variable (potential difference) on the horizontal axis and the dependent variable (current) on the vertical axis. Use the same axes for both the resistor and the filament lamp. Draw two lines or curves of best fit, one through each set of points. Make sure you label the lines, and identify any anomalous results.

© Pearson Education Ltd 2024. Copying permitted for purchasing institution only. This material is not copyright free.

You can calculate the resistance from the potential difference and the current, using the equation on the right. You will need to learn this for the exam.

$$\text{resistance } (\Omega) = \frac{\text{potential difference (V)}}{\text{current (A)}}$$

3 **a** Calculate the resistance of the resistor when the potential difference is 1 V and when it is 6 V.

b Calculat3e the resistance of the filament lamp when the potential difference is 1 V and when it is 6 V.

c Draw a conclusion about how the resistance of the two components changes with increasing potential difference.

_____

d Use evidence from your graph and your calculations to explain how you came to your conclusion.

_____

_____

_____

Evaluation

4 **a** Looking at your graph for the resistor, how close were your points to the line of best fit?

_____

b What does this tell you about the quality of data you have gathered?

_____

5 How reproducible were your results? (Compare your results with other groups.)

_____

_____

© Pearson Education Ltd 2024. Copying permitted for purchasing institution only. This material is not copyright free.

Task 2 – Filament lamps in series and parallel circuits

Practical Objective

To test series and parallel circuits using resistors and filament lamps.

Apparatus

- power supply
- three voltmeters
- three ammeters
- connecting wires
- two crocodile clips
- two filament lamps

Safety

- Never use mains electricity for practical work with circuits.
- Ask your teacher to check your circuit before you switch it on.

Prediction

6 Look at circuits Y and Z below. Explain how you think the readings will compare in the two circuits for:

a the ammeters **b** the voltmeters.

_____

_____

_____

Method

A Connect the circuit shown in circuit Y.

B Set the power pack to 1 V and switch it on. Record the readings on the ammeter and the voltmeters, and then switch off the power.

C Repeat step **B** for settings on the power pack of 2 V, 3 V, 4 V, 5 V and 6 V.

D Now set up the circuit shown in circuit Z.

E Set the power pack to 1 V and switch it on. Record the readings on the ammeters and the voltmeters, and then switch off the power.

F Repeat step **E** for settings on the power pack of 2 V, 3 V, 4 V, 5 V and 6 V.

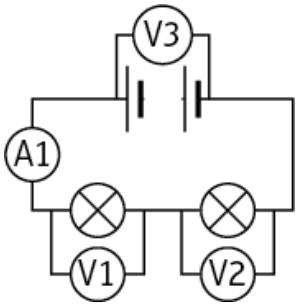

Circuit Y

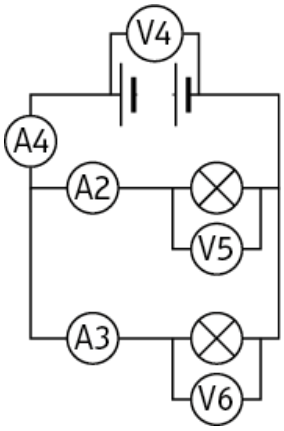

Circuit Z

© Pearson Education Ltd 2024. Copying permitted for purchasing institution only. This material is not copyright free.

Recording your results

7 Record your results for circuits Y and Z in the table below.

Potential difference (volts)	Circuit Y (lamps in series)				Circuit Z (lamps in parallel)					
	A1	V1	V2	V3	A2	A3	A4	V4	V5	V6
0	0	0	0	0	0	0	0	0	0	0
1										
2										
3										
4										
5										
6										

Considering your results/conclusions

8 **a** Compare the total current in the circuit through the two filament lamps when they are connected in series and when they are connected in parallel.

_____

_____

_____

_____

_____

_____

b Compare the potential difference across the two filament lamps when they are connected in series and in parallel.

_____

_____

_____

_____

_____

_____

© Pearson Education Ltd 2024. Copying permitted for purchasing institution only. This material is not copyright free.

9 How does changing the potential difference across each circuit affect how these values compare?

_____

_____

_____

_____

_____

_____

Evaluation

10 Suggest what the answer would be to question **9** if fixed resistors replaced the lamps in the two circuits.

_____

_____

_____

_____

_____

© Pearson Education Ltd 2024. Copying permitted for purchasing institution only. This material is not copyright free.