Name: _____

Investigating resistance

core practical

Date:

Time:

Total marks available: 25

Total marks achieved: _____

Questions

Q1.

* Explain, with the aid of a circuit diagram, the method a student could use to investigate how the resistance of a single lamp changes with the potential difference across the lamp.

(6)

.....

.....

.....

.....

.....

.....

.....

.....

.....

.....

.....

.....

.....

(Total for question = 6 marks)

Q2.

A student measures the current in the lamp for several values of potential difference across the lamp.

Figure 13 shows the student's results.

potential difference across the lamp in volts (V)	current through the lamp in amps (A)
0.06	0.05
0.12	0.08
0.18	0.10
0.24	0.12
0.30	0.13
0.36	0.13

Figure 13

The student uses the results in Figure 13 to write this conclusion.

'As the potential difference across the lamp increases, the current in the lamp increases and the relationship is directly proportional.'

Comment on the student's conclusion.

(3)

.....

.....

.....

.....

.....

.....

(Total for question = 3 marks)

Q3.

A student investigates resistors connected in parallel using a number of resistors.
Each resistor has the same resistance.

Figure 10 shows a circuit diagram with one resistor, R.

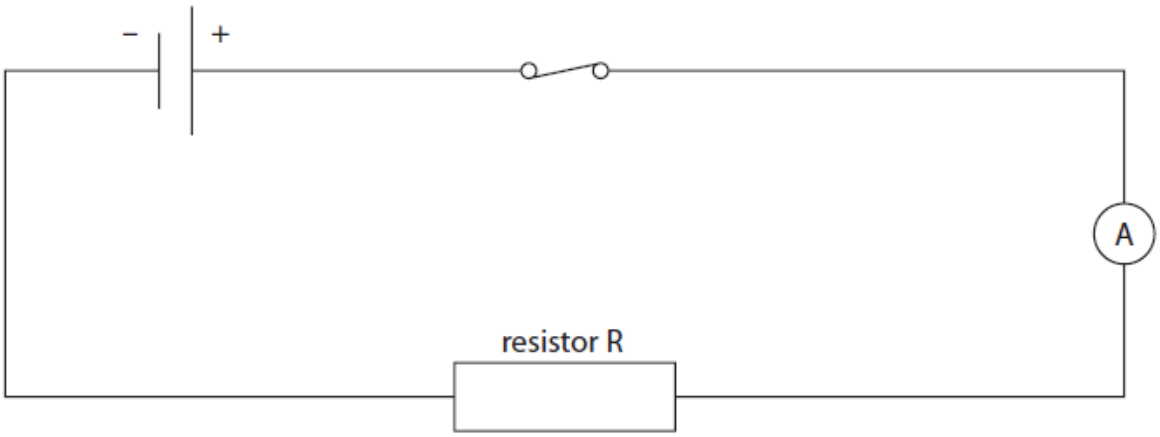

Figure 10

(i) Add to Figure 10:

- a voltmeter to find the potential difference across resistor R
- another resistor in parallel with resistor R.

(2)

(ii) State the measurements that the student must take to find the overall resistance of the resistors in parallel.

(2)

.....

.....

.....

.....

(iii) The student investigates how the overall resistance of the circuit changes when additional resistors are added in parallel to R.

Each resistor has the same resistance.

Figure 11 shows the results of the student's investigation.

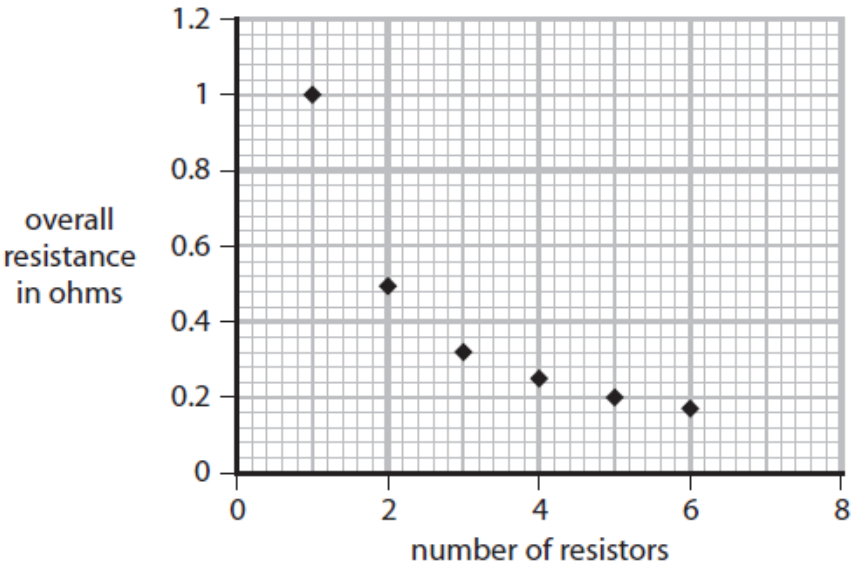

Figure 11

State the resistance of a single resistor.

(1)

resistance = ... Ω

(iv) Comment on the relationship between the overall resistance of the circuit and the number of resistors in parallel.

Use information from Figure 11 to support your answer.

(3)

.....

.....

.....

.....

.....

.....

.....

.....

(Total for question = 8 marks)

Q4.

* The table in Figure 14 gives some information about **series** and **parallel** circuits.

series and **parallel** circuits
A battery can be connected to two equal value resistors in **series**. The same battery can be connected to the same two equal value resistors in **parallel**.
The current from the battery when the resistors are in **series** is different from the current from the battery when the resistors are in **parallel**.
The potential difference across each resistor when the resistors are in **series** will be different from the potential difference across each resistor when the resistors are in **parallel**.

Figure 14

Describe how a student can use ammeters and voltmeters to investigate the information given in Figure 14.

Your answer should include

- circuit diagrams showing how the currents and voltages can be measured
- a comparison of the results that would be expected

(6)

Space for circuit diagrams

.....

.....

.....

.....

.....

.....

.....

.....

.....

.....

.....

.....

.....

.....

.....

.....

.....

.....

.....

.....

.....

.....

.....

.....

(Total for question = 6 marks)

Q5.

Figure 20 shows some of the apparatus that students use to determine the resistance of a piece of iron wire.

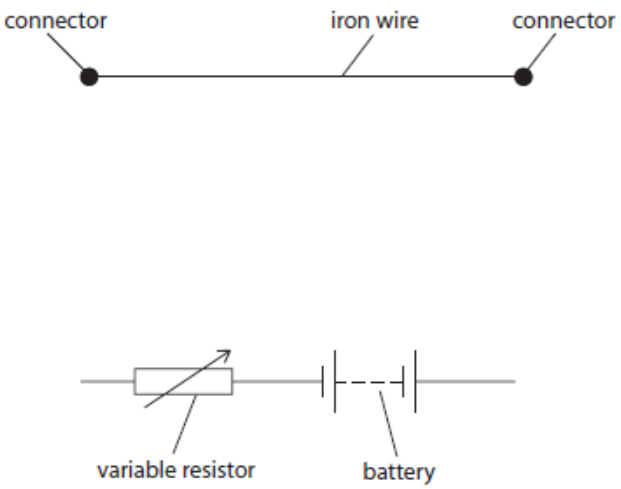

Figure 20

Add connecting wires, a voltmeter and an ammeter to complete the circuit in Figure 20 so that the students can determine the resistance of the piece of iron wire.

(2)

(Total for question = 2 marks)

Mark Scheme

Q1.

Question Number	Answer	Mark
*	Answers will be credited according to candidate's deployment of knowledge and understanding of the material in relation to the qualities and skills outlined in the generic mark scheme. The indicative content below is not prescriptive and candidates are not required to include all the material which is indicated as relevant. Additional content included in the response must be scientific and relevant. AO1(6 marks) Circuit diagram including • power supply • ammeter • voltmeter • filament lamp • means of varying potential difference Description of method • measure current with ammeter • measure potential difference with voltmeter • vary the potential difference • calculate the resistance • repeat and compare	**(6)** AO 1 2

Level	Mark	Descriptor
	0	• No rewardable material.
Level 1	1-2	• An explanation that demonstrates elements of physics understanding, some of which is inaccurate. Understanding of scientific, enquiry, techniques and procedures lacks detail. (AO1) • Presents an explanation that is not logically ordered and with significant gaps. (AO1)
Level 2	3-4	• An explanation that demonstrates physics understanding, which is mostly relevant but may include some inaccuracies. Understanding of scientific ideas, enquiry, techniques and procedures is not fully detailed and/or developed. (AO1) • Presents an explanation of the procedure that has a structure, which is mostly clear, coherent and logical with minor steps missing. (AO1)
Level 3	5-6	• An explanation that demonstrates accurate and relevant physics understanding throughout. Understanding of the scientific ideas, enquiry, techniques and procedures is detailed and fully developed. (AO1) • Presents an explanation that has a well-developed structure, which is clear, coherent and logical. (AO1)

Q2.

Question Number:	Answer	Additional guidance	Mark
	a comment that makes reference to any three of the following points: • idea that the current increases with the p.d. /voltage (1) • until (current) reaches a constant value (1) • the current is not directly proportional to p.d. (1) • uses idea that the values do not go up in equal steps / does not show doubling	(staying) at 0.13(A)	**(3)** AO 3 2a AO 3 2b

Q3.

Question number	Answer	Additional guidance	Mark
(i)	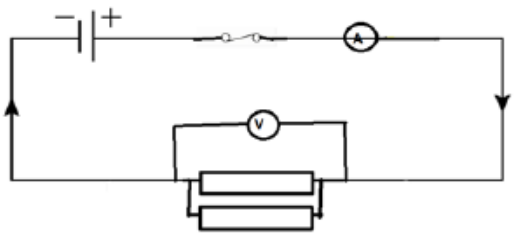 voltmeter in parallel across resistor (1) second resistor in parallel (1)		**(2)**

Question number	Answer	Additional guidance	Mark
(ii)	potential difference/ voltage (drop across resistors in parallel) (1) current (in the circuit) (1)	voltmeter reading ammeter reading	(2)

Question number	Answer	Additional guidance	Mark
(iii)	1 Ω	one ohm	(1)

Question number	Answer	Additional guidance	Mark
(iv)	Comments to include: the (overall) resistance decreases as the number of resistors (in parallel) increases (1) the relationship is non-linear (1) any two relevant values from the graph (1)	 decreases at a decreasing rate the relationship is inversely proportional scores first 2 marks	(3)

Q4.

Question number	Indicative content	Mark
*	Answers will be credited according to candidate's deployment of knowledge and understanding of the material in relation to the qualities and skills outlined in the generic mark scheme. The indicative content below is not prescriptive and candidates are not required to include all the material which is indicated as relevant. Additional content included in the response must be scientific and relevant. Description (may be inferred from circuit diagram(s)) • Connect ammeter in series with resistor(s) • Connect voltmeter across / in parallel with resistor(s) • Move meters to new positions. Circuit diagram(s) (accept any recognisable symbol) • Two resistors in series with a battery • Two resistors in parallel with a battery • An ammeter in series with the resistor(s) and battery • A voltmeter in parallel with the resistor(s) Expected results (allow reverse arguments) • Current (from battery) greater in parallel circuit than in series circuit • Pd across resistor(s) less in series circuit than in parallel circuit • Pd across resistor(s) in parallel circuit same as pd across battery • Pd across battery shared between resistors in series • Current (from battery) shared between resistors in parallel • Current same throughout whole of series circuit	**(6)** **AO1**

Level	Mark	Descriptor
	0	• No rewardable material.
Level 1	1-2	• Demonstrates elements of physics understanding, some of which is inaccurate. Understanding of scientific, enquiry, techniques and procedures lacks detail. (AO1) • Presents a description which is not logically ordered and with significant gaps. (AO1)
Level 2	3-4	• Demonstrates physics understanding, which is mostly relevant but may include some inaccuracies. Understanding of scientific ideas, enquiry, techniques and procedures is not fully detailed and/or developed. (AO1) • Presents a description of the procedure that has a structure which is mostly clear, coherent and logical with minor steps missing. (AO1)
Level 3	5-6	• Demonstrates accurate and relevant physics understanding throughout. Understanding of the scientific ideas, enquiry, techniques and procedures is detailed and fully developed. (AO1) • Presents a description that has a well-developed structure which is clear, coherent and logical. (AO1)

Level	**Mark**	**Additional Guidance**	**General additional guidance – the decision within levels** e.g. - At each level, as well as content, the scientific coherency of what is stated will help place the answer at the top, or the bottom, of that level.
	0	No rewardable material.	
Level 1	1–2	Additional guidance description of that would allow at least two measurements **or** an expected result of those measurements	Possible candidate responses any two correctly connected meters (may be in different circuits) ***or*** resistors in a series and a parallel circuit ***or*** current in parallel circuit shared between resistors ***or*** Pd of supply shared between resistors in series
Level 2	3–4	Additional guidance descriptions of obtaining two measurements ***with*** an expected results of those measurements for at least one circuit **or** expected results of those comparisons between circuits **without** description of obtaining measurements	Possible candidate responses a series and a parallel circuit with a correctly connected meter ***with*** current in parallel circuit shared between resistors but pd across them is same as supply **or** (total) current more in parallel than in series circuit and pd across each resistor in series less than in parallel **without** creditworthy circuit diagram or description of obtaining measurements

Level 3	5–6	Additional guidance descriptions of obtaining comparable measurements ***with*** expected results of those comparisons between circuits	Possible candidate responses a series and a parallel circuit with at least one correctly connected ammeter and voltmeter ***with*** (total) current more in parallel than in series circuit and pd across each resistor in series less than in parallel

Q5.

Question number	Answer	Additional guidance	Mark
	voltmeter connected in parallel with the iron wire / any part of the iron wire (1) ammeter connected in series with the iron wire (1) example: 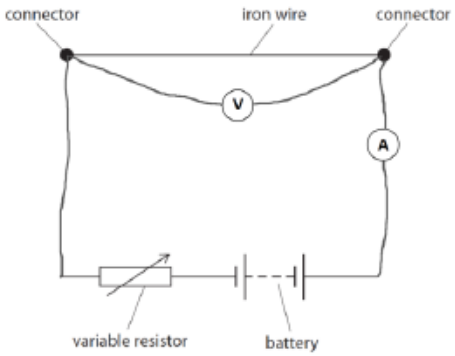 	accept any recognisable symbols. accept symbol drawn over connecting wire do not credit the same type of meter shown in contradictory positions	**(2)** **AO1**