Name: _____

Investigating water

core practical

Date:

Time:

Total marks available: 43

Total marks achieved: _____

Questions

Q1.

A student uses the apparatus in Figure 3 to determine the specific heat capacity of water.

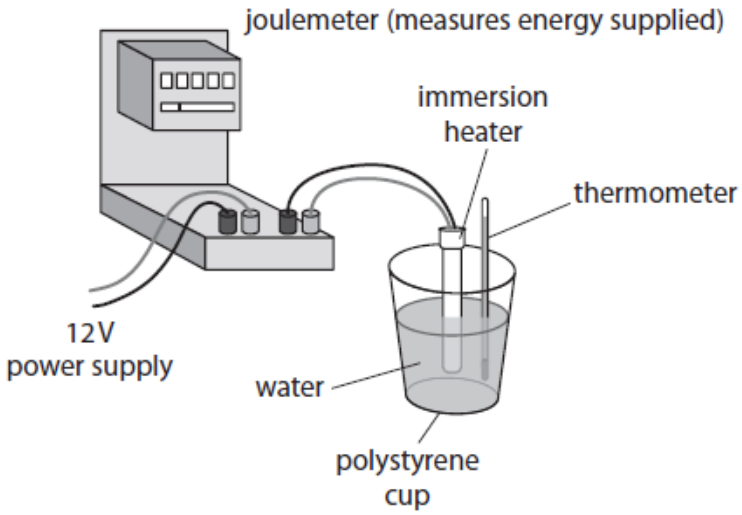

Figure 3

(i) State the measurements needed to calculate the specific heat capacity of water.

(4)

.....

.....

.....

.....

.....

.....

.....

.....

(ii) State **two** ways that the apparatus could be adapted to improve the procedure.

(2)

1 .....

.....

2 .....

.....

(Total for question = 6 marks)

Q2.

A student wants to determine the specific heat capacity of copper.

Figure 5 shows a piece of copper, with a thread tied around it, in a glass beaker of boiling water.

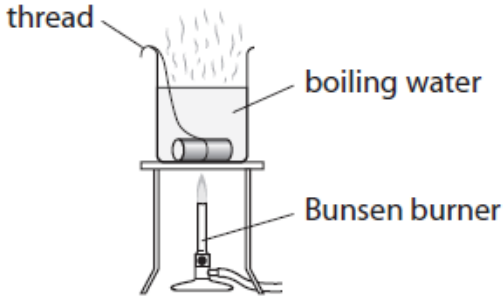

Figure 5

The student leaves the piece of copper in the boiling water so that the copper reaches a temperature of 100 °C.

The student uses the thread to take the piece of copper out of the boiling water.

The student puts the hot piece of copper into a different beaker of cold water at 20 °C.

The apparatus is shown in Figure 6.

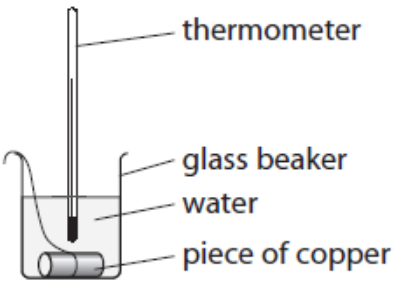

Figure 6

The student assumes that the thermal energy gained by the water equals the thermal energy lost by the piece of copper.

The water and copper both reach a temperature of 22 °C.

The cold water gains 1050 J of energy.

The mass of the piece of copper is 0.058 kg.

(i) Calculate a value for the specific heat capacity of copper, using these results.

Use the equation

change in thermal energy = mass × specific heat capacity × change in temperature

$$\Delta Q = m \times c \times \Delta\theta$$

(2)

specific heat capacity of copper from these results = ... J/kg °C

(ii) The value for the specific heat capacity of copper obtained from the student's results is lower than the correct value.

State **two** ways that the experiment could be improved to give a value that is closer to the correct value.

(2)

1 .....

.....

2 .....

.....

(Total for question = 4 marks)

Q3.

Describe an investigation to determine the value for the specific heat capacity of water.

Your answer should include details of

- the apparatus needed
- the experimental procedure
- how the value may be calculated from the measurements taken.

You may draw a diagram to help your answer.

(6)

.....

.....

.....

.....

.....

.....

.....

.....

.....

.....

.....

.....

(Total for question = 6 marks)

Q4.

* This question is about determining the specific heat capacity of aluminium.
An aluminium block is placed in boiling water as shown in Figure 21.

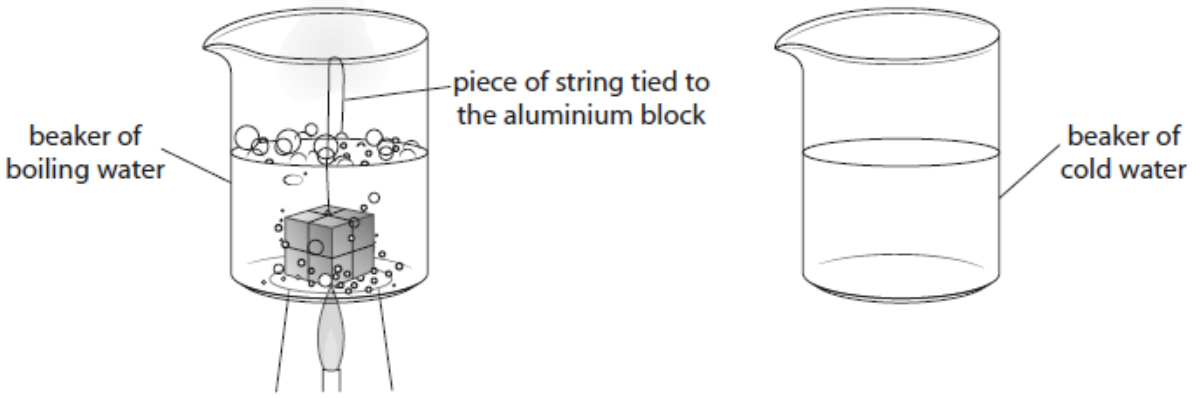

Figure 21

The piece of string is tied to the aluminium block so the block can be transferred from the boiling water to the cold water.

Describe how a student could use this apparatus, and any additional items needed, to determine the specific heat capacity of aluminium.

Your answer should include how the student would

- obtain the necessary measurements
- use the measurements to calculate the specific heat capacity of aluminium.

(6)

.....

.....

.....

.....

.....

.....

.....

.....

.....

.....

.....

.....

.....

.....

.....

.....

.....

.....

(Total for question = 6 marks)

Q5.

Figure 19 shows some apparatus that may be used to determine the specific heat capacity of water.

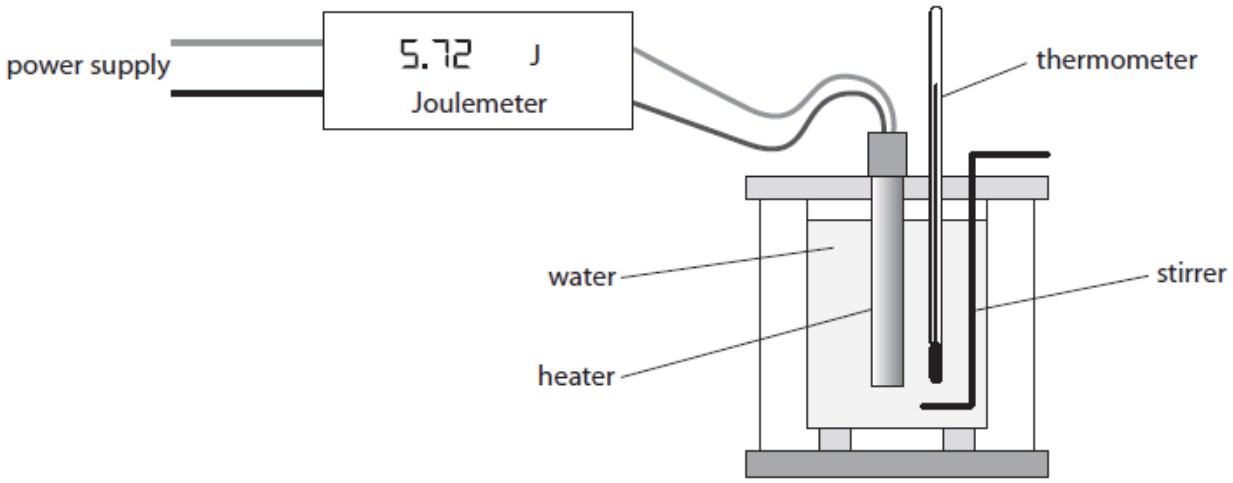

Figure 19

A student measures the initial temperature of the water.

The power supply is switched on for 10 minutes and then switched off.

Explain how the student should then obtain an accurate reading for the final temperature of the water, to be used in the calculation of the specific heat capacity.

(3)

.....

.....

.....

.....

.....

(Total for question = 3 marks)

Q6.

As part of the testing of different types of steel, a steelworker needs to obtain a temperature-time graph for **solidifying** molten steel.

Figure 9 shows an arrangement the steelworker could use.

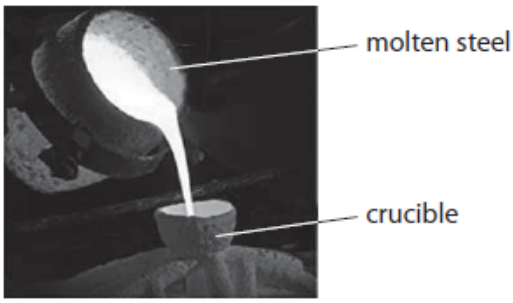

Figure 9

The following devices are available to the steel worker.
The melting point of these steels is between 1425 and 1540 °C

device	range of temperatures	other notes
Thermocouple thermometer	−50 to 1800 °C	Fast response time Probe inserted into melt
Infrared thermometer (pyrometer)	1200 to 2000 °C	Remotely read, using infrared radiation, measures the temperature of the surface it is aimed at
Platinum resistance thermometer	−200 to 850 °C	The most accurate of thermometers based on how resistance changes with temperature

Describe how the steelworker could obtain a temperature-time graph for steel as it goes from the liquid to the solid state.

(4)

.....

.....

.....

.....

.....

.....

.....

.....

.....

(Total for question = 4 marks)

Q7.

A student is investigating the melting of ice.

The student has some crushed ice in a beaker at a temperature of −20 °C.

The student heats the beaker and its contents for 20 minutes.

Figure 24 is a graph of the student's results.

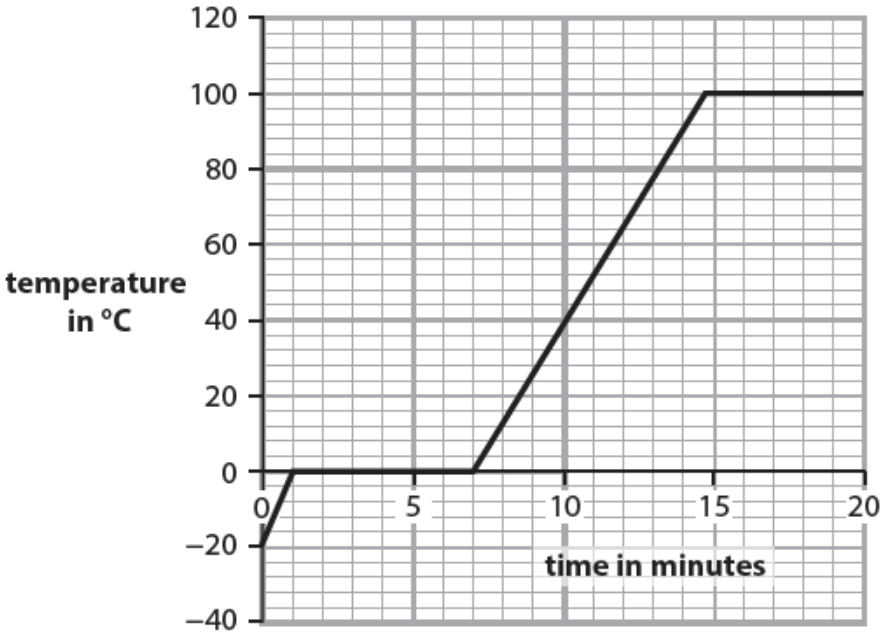

Figure 24

Using information from the graph, describe the changes that take place in the 20 minutes shown on the graph.

Your answer should refer to

- data from the graph
- the state (solid, liquid or gas) of the contents of the beaker.

(6)

.....

.....

.....

.....

.....

.....

.....

.....

.....

.....

.....

.....

(Total for question = 6 marks)

Q8.

A student needs to determine the specific heat capacity of water.

Figure 22 shows some of the equipment the student uses.

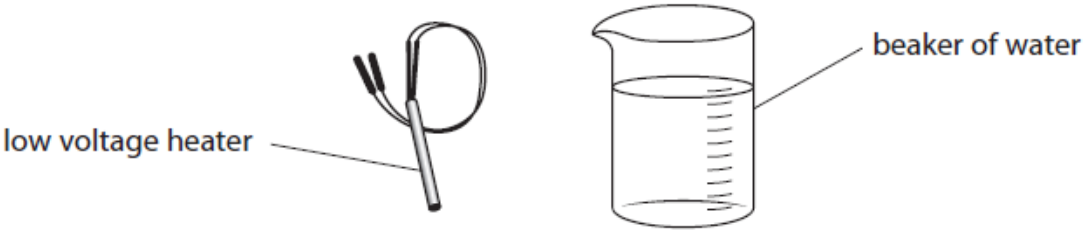

Figure 22

Describe the method the student should use to determine the specific heat capacity of water.

Your description should include, with reasons,

- any other equipment needed
- the measurements needed.

You may draw a diagram if it helps your answer.

(6)

(Total for question = 6 marks)

Q9.

Figure 5 shows the apparatus used to investigate the melting of some crushed ice.

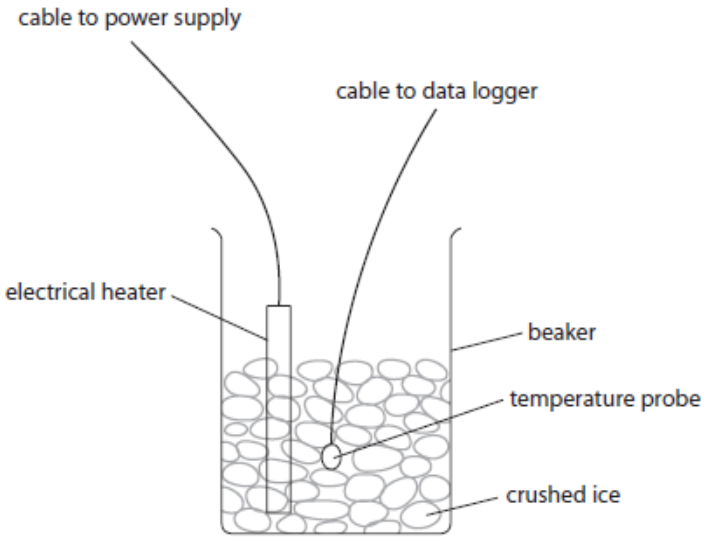

Figure 5

(i) Suggest **one** safety precaution needed when using the electrical heater.

(1)

.....

.....

(ii) Suggest **one** way of heating the crushed ice without using electricity.

(1)

.....

.....

(Total for question = 2 marks)

Mark Scheme

Q1.

Question Number:	Answer	Additional Guidance	Mark
(i)	a description to include:		**(4)** AO 1 2
	(measurement of) the mass of water (1)	accept volume / weight of water ignore amount	
	(measurement of) the temperature (rise/change) (1)	accept (take) thermometer reading	
	(measurement of) the energy supplied / from heater (1)	accept (take) reading of the joulemeter ignore 'change in thermal energy' (from equation)	
	detail of any of the above (1)	e.g. measure temp at the start and end or measure mass of empty cup or start and end readings on the meter	

Question Number:	Answer	Additional Guidance	Mark
(ii)	any two improvements from:	both marks can be scored in one answer space ignore repeating readings ignore increase voltage / power / energy ignore use of clamp to hold thermometer / heater	(2) AO 3 3b
	add lid /cover (1)		
	add lagging / insulation (1)	accept use better insulator or better insulated / thicker cup accept use calorimeter ignore use glass beaker unless cup is inside it ignore different type of cup	
	add a stirrer (1) use a more sensitive thermometer (1) ensure heater fully submerged (1)	accept use digital / electric thermometer / data logger	

Q2.

Question number	Answer	Additional guidance	Mark
(i)	Rearrangement (and substitution) (1) (c) $= \frac{1050}{0.058 \times 78}$ evaluation (1) 230 (J/kg °C)	$c = \frac{\Delta Q}{m \times \Delta\theta}$ award 1 mark if 78 seen accept 232(J/kg °C) award full marks for correct answer without working.	(2)

Question number	Answer	Additional guidance	Mark
(ii)	any two of the following reduce heat loss from water/insulate beaker/add cover (1) make the temperature rise larger/use a larger piece of copper/ use a smaller amount of water (1) (use)a stirrer (1) account for heat gained by glass beaker (1) transfer the hot copper faster (1) use a different heating method (1) measure the temperature of the boiling water (1)	ignore more accurate measurements e.g. thermometer, balance etc. ignore taking repeats start with colder water	**(2)**

Q3.

SSQ NO:	CS NO:	Answer	Mark
*		Answers will be credited according to candidate's deployment of knowledge and understanding of the material in relation to the qualities and skills outlined in the generic mark scheme. The indicative content below is not prescriptive and candidates are not required to include all the material which is indicated as relevant. Additional content included in the response must be scientific and relevant. (Accept the method of cooling a heated object in water but consult your TL.) **AO1 strand 2 (6 marks)** **Details of the apparatus to include:**	**(6)** **AO1.2**

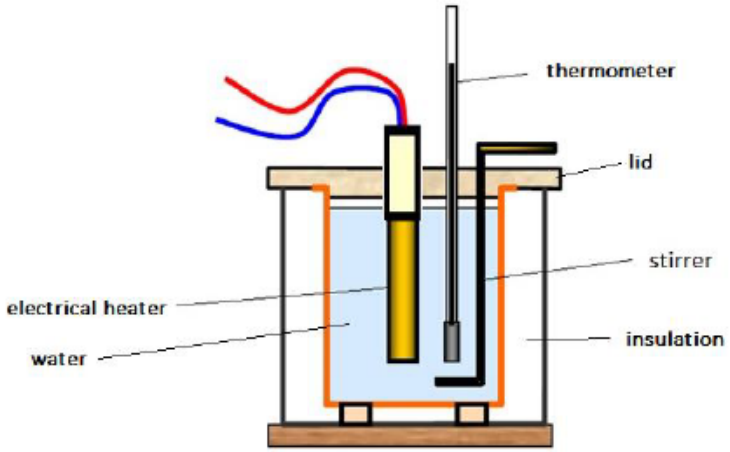

(resourcefulphysics.org)

- credit all elements seen in diagram or stated
- may also include power supply / electrical circuitry
- other apparatus – balance / scales ; stopwatch ; voltmeter / ammeter / joulemeter

		• ignore bunsen burner *(continued ...)* **Steps taken with the procedure and calculation including:** • measure mass of water (with a balance) • measure initial temperature (with thermometer) • switch on for a (set) time / use of stopwatch • measure final / highest temperature (reached) • measure energy input on joulemeter / measure V, I and t • extra detail e.g. stirring / how to get final maximum temperature • rearrange $\Delta Q = m \times c \times \Delta\theta$ to find c $c = \frac{\Delta Q}{m \times \Delta\theta}$ • correct use of graph to determine c	

Level	Mark	Descriptor
	0	• No rewardable material.
Level 1	1-2	• Demonstrates elements of physics understanding, some of which is inaccurate. Understanding of scientific, enquiry, techniques and procedures lacks detail. (AO1) • Presents a description which is not logically ordered and with significant gaps. (AO1)
Level 2	3-4	• Demonstrates physics understanding, which is mostly relevant but may include some inaccuracies. Understanding of scientific ideas, enquiry, techniques and procedures is not fully detailed and/or developed. (AO1) • Presents a description of the procedure that has a structure which is mostly clear, coherent and logical with minor steps missing. (AO1)
Level 3	5-6	• Demonstrates accurate and relevant physics understanding throughout. Understanding of the scientific ideas, enquiry, techniques and procedures is detailed and fully developed. (AO1) • Presents a description that has a well-developed structure which is clear, coherent and logical. (AO1)

Summary for guidance

Level	Mark	Additional Guidance	General additional guidance – the decision within levels e.g. - At each level, as well as content, the scientific coherency of what is stated will help place the answer at the top, or the bottom, of that level.
	0	No rewardable material.	
Level 1	1–2	Additional guidance list of relevant apparatus: at least 2 items AND at least one reasonable step described OR gives equation to find c	Possible candidate responses some apparatus named e.g. thermometer, balance, stirrer, joulemeter, ammeter, voltmeter, beaker diagram with some labels measure mass of water use a thermometer use of $\Delta Q = m \times c \times \Delta\theta$
Level 2	3–4	Additional guidance list of apparatus for measurements AND logical steps including how to find $\Delta\theta$ **OR** ΔQ	Possible candidate responses balance / thermometer together with joulemeter / stopwatch etc. measure initial and final temperatures with a thermometer realistic use of joulemeter
Level 3	5–6	Additional guidance understanding is detailed and fully developed. includes detail about apparatus used to obtain measurements **AND** details in steps taken, including how to find $\Delta\theta$ **AND** ΔQ	Possible candidate responses (use of) balance / thermometer / stopwatch / insulated can / electrical heater etc. measure mass of water (with a balance) / measure initial and final temperatures with a thermometer + electrical heating applied
		AND how to determine c	for a (set) time + realistic use of joulemeter (or power (VI) and time) $c = \frac{\Delta Q}{m \times \Delta\theta}$

Q4.

Question number	Indicative content	Mark
*	Answers will be credited according to candidate's deployment of knowledge and understanding of the material in relation to the qualities and skills outlined in the generic mark scheme. The indicative content below is not prescriptive and candidates are not required to include all the material which is indicated as relevant. Additional content included in the response must be scientific and relevant. Procedure • Measure the temperature of the boiling water • Allow sufficient time for block to reach temperature of boiling water • Measure temperature of cold water in beaker • Using a thermometer • Transfer (hot) aluminium block to cold water in the beaker. • Work quickly to avoid thermal energy loss during transfer • Measure temperature of water • Stir to ensure even distribution • Measure maximum temperature reached by water • Calculate temp rise of water by subtracting initial from final temperature. • Calculate temp drop of aluminium by subtracting final temperature from 100. • Find mass of beaker and water and aluminium • Use a balance • Empty water from beaker and dry beaker and block • Weigh beaker and block alone • Find mass of water by subtraction. • Allow plausible method of finding mass of water before putting block in.	**(6)** **AO2 and AO3**

	Process results • Calculate thermal energy gained water using $\Delta Q = m \times c \times \Delta\theta$ • Thermal energy gained by water = thermal energy lost by aluminium • Specific heat capacity of aluminium = $\frac{\text{thermal energy transferred}}{\text{mass of Al} \times \text{temp drop of Al}}$	

Level	Mark	Descriptor
	0	• No awardable content
Level 1	1–2	• The plan attempts to link and apply knowledge and understanding of scientific enquiry, techniques and procedures, flawed or simplistic connections made between elements in the context of the question. (AO2) • Analyses the scientific information but understanding and connections are flawed. An incomplete plan that provides limited synthesis of understanding. (AO3)
Level 2	3–4	• The plan is mostly supported through linkage and application of knowledge and understanding of scientific enquiry, techniques and procedures, some logical connections made between elements in the context of the question. (AO2) • Analyses the scientific information and provides some logical connections between scientific enquiry, techniques and procedures. A partially completed plan that synthesises mostly relevant understanding, but not entirely coherently. (AO3)
Level 3	5–6	• The plan is supported throughout by linkage and application of knowledge and understanding of scientific enquiry, techniques and procedures, logical connections made between elements in the context of the question. (AO2) • Analyses the scientific information and provide logical connections between scientific concepts throughout. A well-developed plan that synthesises relevant understanding coherently. (AO3)

Summary for guidance

Level	Mark	Additional Guidance	General additional guidance – the decision within levels e.g. - At each level, as well as content, the scientific coherency of what is stated will help place the answer at the top, or the bottom, of that level.
	0	No rewardable material.	
Level 1	1–2	Additional guidance Partially complete description of a suitable procedure with at least one measurement	Possible candidate responses Heat up the block in the boiling water. Then put the block into the cold water. Measure the temperature reached by the water.
Level 2	3–4	Additional guidance Mostly complete description of a suitable procedure with at least two measurements and some description of processing the results.	Possible candidate responses As above with Measure mass of water. Use $\Delta Q = m \times c \times \Delta\theta$ to find thermal energy transferred
Level 3	5–6	Additional guidance Detailed description of a suitable procedure with most of the necessary measurements and a clear description of processing the results.	Possible candidate responses As above with Calculate temperature changes by subtraction. Calculate thermal energy lost by Al as being equal to thermal energy gained by water. Specific heat capacity of Al = $\frac{\text{thermal energy transferred}}{\text{mass of Al} \times \text{temp drop of Al}}$

Q5.

Question number	Answer	Additional guidance	Mark
	an explanation linking any **three** from: stir the water before taking a reading of temperature (1) (continue to) observe temperatures after switching off (1) record the maximum / highest / peak temperature reached (1) take temperature reading at eye level (1) conduction (and convection) take time (1)	 allow "for **longer** than 10 minutes" allow wait(ing period) in correct context until the temperature stops changing takes time (for water / thermometer) to heat through	**(3)** **AO1.2**

Q6.

Question number	Answer	Additional guidance	Mark
	An answer that combines **any four** of the following points of understanding to provide a logical description: • chooses either thermocouple or infra-red thermometer (1) • molten steel is poured into a crucible (1) • a stopwatch is started (1) • the crucible + contents are allowed to cool down (in the room) (1) • temperatures are taken at regular intervals (e.g. every minute) (1)	 any interval with steel – every 10 minutes etc.	**(4)**

Q7.

Question	Indicative content	Mark
	Answers will be credited according to candidate's deployment of knowledge and understanding of the material in relation to the qualities and skills outlined in the generic mark scheme. The indicative content below is not prescriptive and candidates are not required to include all the material which is indicated as relevant. Additional content included in the response must be scientific and relevant. AO1 • ice melts at 0 °C • water boils at 100 °C • 0 to 1 minute temperature of ice rising • 1 to 7 minutes ice melting • 1 to 7 minutes energy supplied is used to increase (potential) energy of ice particles • 1 to 7 minutes energy supplied is used to break bonds (between ice particles) • 7 to about 15 minutes temperature of water rising • 7 to about 15 minutes energy supplied is used to increase (kinetic) energy of water particles • about 15 to 20 minutes water boiling • about 15 to 20 minutes energy supplied is used to break bonds (between water particles)	**(6)** **AO1.2**

Level	Mark	Descriptor
	0	• No rewardable material.
Level 1	1-2	• Demonstrates elements of physics understanding, some of which is inaccurate. Understanding of scientific, enquiry, techniques and procedures lacks detail. (AO1) • Presents a description which is not logically ordered and with significant gaps. (AO1)
Level 2	3-4	• Demonstrates physics understanding, which is mostly relevant but may include some inaccuracies. Understanding of scientific ideas, enquiry, techniques and procedures is not fully detailed and/or developed. (AO1) • Presents a description of the procedure that has a structure which is mostly clear, coherent and logical with minor steps missing. (AO1)
Level 3	5-6	• Demonstrates accurate and relevant physics understanding throughout. Understanding of the scientific ideas, enquiry, techniques and procedures is detailed and fully developed. (AO1) • Presents a description that has a well-developed structure which is clear, coherent and logical. (AO1)

Level	Mark	Additional Guidance	General additional guidance – the decision within levels e.g. - At each level, as well as content, the scientific coherency of what is stated will help place the answer at the top, or the bottom, of that level.
	0	No rewardable material	
Level 1	1–2	Additional guidance limited description including isolated facts for any section	Possible candidate responses temperature of ice/solid increases OR ice melts OR water boils
Level 2	3–4	Additional guidance limited description relating knowledge and understanding to interpretation of graph in **one** section plus an isolated fact	Possible candidate responses temperature of ice/solid increases for 1 minute AND temperature of the water increases
Level 3	5–6	Additional guidance detailed description relating knowledge and understanding to interpretation of graph in **two** sections plus an isolated fact	Possible candidate responses temperature of ice/solid increases for 1 minute AND ice melting while 0 °C for 6 minutes AND water boils

Q8.

Question number	Indicative content	Mark
*	Answers will be credited according to candidate's deployment of knowledge and understanding of the material in relation to the qualities and skills outlined in the generic mark scheme. The indicative content below is not prescriptive and candidates are not required to include all the material which is indicated as relevant. Additional content included in the response must be scientific and relevant. Equipment • Thermometer • Measuring cylinder / balance • Power supply • Stirrer • Joule meter / ammeter / voltmeter • Stopwatch / clock Measurements • Mass / volume of water • Initial / final / change of temperature of water • Voltage / current / energy / power • Time (heated for) Detail • Lid/insulation to reduce energy loss • Ensure heater fully immersed / keep stirring the water • Use of equation $\Delta Q = m \times c \times \Delta\theta$ / calculation of input energy • Repeat and find average • Plot graph of temp change and time / energy Credit can be given for correctly labelled diagrams	**(6)** **AO1**

Level	Mark	Descriptor
	0	• No rewardable material.
Level 1	1-2	• Demonstrates elements of physics understanding, some of which is inaccurate. Understanding of scientific, enquiry, techniques and procedures lacks detail. (AO1) • Presents a description which is not logically ordered and with significant gaps. (AO1)
Level 2	3-4	• Demonstrates physics understanding, which is mostly relevant but may include some inaccuracies. Understanding of scientific ideas, enquiry, techniques and procedures is not fully detailed and/or developed. (AO1) • Presents a description of the procedure that has a structure which is mostly clear, coherent and logical with minor steps missing. (AO1)
Level 3	5-6	• Demonstrates accurate and relevant physics understanding throughout. Understanding of the scientific ideas, enquiry, techniques and procedures is detailed and fully developed. (AO1) • Presents a description that has a well-developed structure which is clear, coherent and logical. (AO1)

Level	Mark	Additional Guidance	General additional guidance – the decision within levels e.g. - At each level, as well as content, the scientific coherency of what is stated will help place the answer at the top, or the bottom, of that level.
	0	No rewardable material.	
Level 1	1–2	Additional guidance one measurement **or** two items of equipment **or** one piece of detail	Possible candidate responses measure the temperature of the water to start with **or** the student needs a power supply and a thermometer **or** insulated material around the beaker
Level 2	3–4	Additional guidance two items of equipment and at least one measurement **or** one piece of equipment and two measurements **or** two items of equipment and one piece of detail **or** one measurement and one piece of detail	Possible candidate responses The student needs a measuring cylinder to measure the volume of water. They also need a thermometer **Or** Measure the temperature rise of the water and use a balance to measure the mass **or** They need a power supply for the heater and a voltmeter. Keep the heater in the water. **or** Measure temperature rise of the water. Keep stirring the water all the time.
Level 3	5–6	Additional guidance two items of equipment and two measurements and one piece of detail.	Possible candidate responses The student needs a balance to find the mass of water. They also need a thermometer to measure the rise in temperature of the water. Then use the equation $\Delta Q = m \times c \times \Delta\theta$

Q9.

Question number	Answer	Additional guidance	Mark
i	any one from do not touch heater (when it is switched on) (1) do not use mains (voltage) (1) use gloves/cloth to handle beaker/heater (after water is heated) (1)	 accept only switch on when in beaker/water 'use gloves' must be qualified with a purpose in using them e.g. use gloves to prevent burns	**(1)** **AO1**

Question number	Answer	Additional guidance	Mark
ii	any one from bunsen (burner) (1) putting out in the sunlight (1) water bath (1)	 gas (heating) solar accept use hands (to warm)	**(1)** **AO1**