Questions

Q1.

When white light crosses the boundary between air and glass, it can split up into the colours of the spectrum.

Explain, in terms of speed, why the light behaves like this.

(3)

.....

.....

.....

.....

.....

.....

.....

.....

(Total for question = 3 marks)

Q2.

Light waves and sound waves are both used in the diagnosis and treatment of medical conditions

(i) A doctor uses an endoscope to look inside the body of a patient.

Explain how optical fibres are used in endoscopes.

You may draw a labelled diagram to help with your answer.

(3)

.....

.....

.....

.....

.....

.....

.....

(ii) Describe how ultrasound can be used as a medical treatment for illness or injury.

(2)

.....

.....

.....

.....

Q3.

The diagram shows the formation of an image produced by one type of lens.

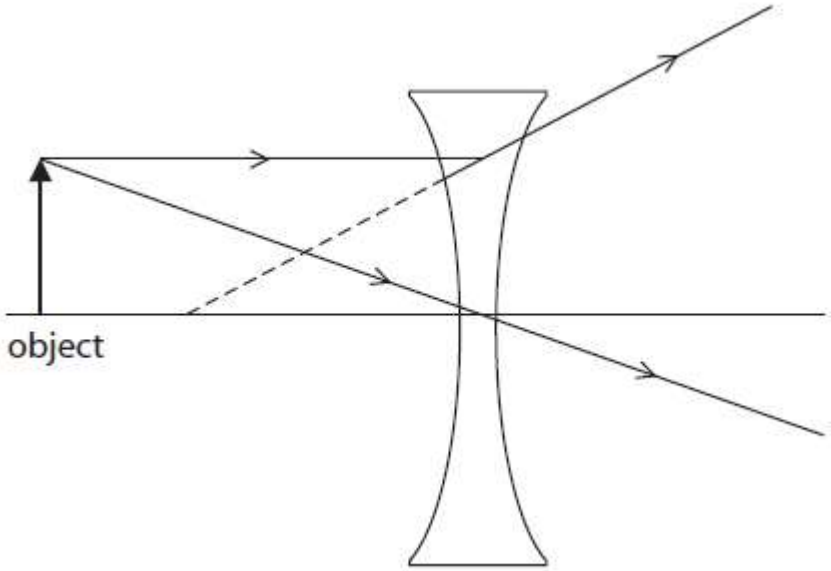

(i) On the diagram, draw and label the image produced.

(1)

(ii) On the diagram, show and label the focal length of the lens.

(1)

(iii) The type of lens shown in the diagram is used to correct a vision defect.

Name this vision defect.

(1)

.....

(iv) This lens has a focal length of −0.33 m.
An object is 0.50 m in front of the lens.

Calculate the distance of the image from the lens.

(4)

distance of image from lens = ... m

Q4.

The following arrangement is used as a solar powered shower.

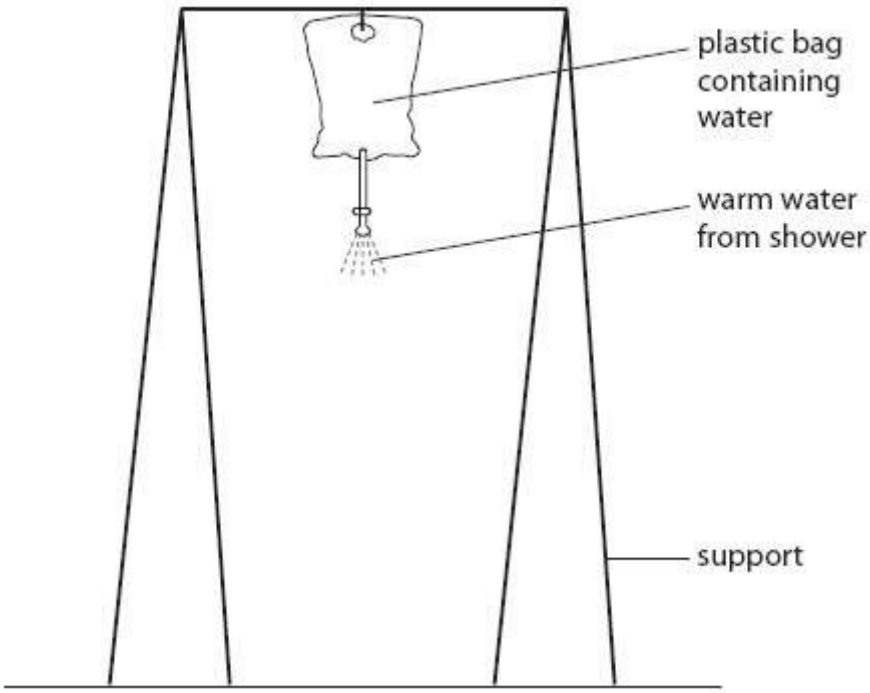

The bag is left out in the sunlight during the day.

(i) Explain what colour the bag should be to heat the water to the highest temperature.

(2)

.....

.....

.....

.....

(ii) On a sunny day the bag is filled with cold water.
Explain why the temperature of the water increases and then stays constant.

(3)

.....

.....

.....

.....

.....

.....

Q5.

Lenses are used in spectacles to treat some vision defects.
The two main lens types are converging lenses and diverging lenses.

(i) Diverging lenses always produce virtual, diminished images.

Which row of the table describes the images produced by a converging lens?
Put a cross (☒) in the box next to your answer.

(1)

	type of image	size of image
☐ **A**	only real	only magnified
☐ **B**	either real or virtual	either magnified or diminished
☐ **C**	either real or virtual	only magnified
☐ **D**	only virtual	only diminished

(ii) Describe how the power of a lens is related to its shape.
You may draw labelled diagrams if it helps your answer.

(2)

.....

.....

.....

.....

Q6.

The lens shown in the diagram has a focal length of 12.0 cm.

(a) Complete the sentences by putting a cross (☒) in the box next to your answer.

(i) This lens can produce

(1)

☐ **A** only inverted images
☐ **B** only real images
☐ **C** only virtual images
☐ **D** both real and virtual images

(ii) The power of the lens is

(1)

☐ **A** 8.3 dioptre
☐ **B** 8.3×10^{-1} dioptre
☐ **C** 8.3×10^{-2} dioptre
☐ **D** 8.3×10^{-3} dioptre

(iii) The diagram shows a converging lens with its focal length marked. Over this diagram draw a converging lens of greater power and mark in its focal length.

(2)

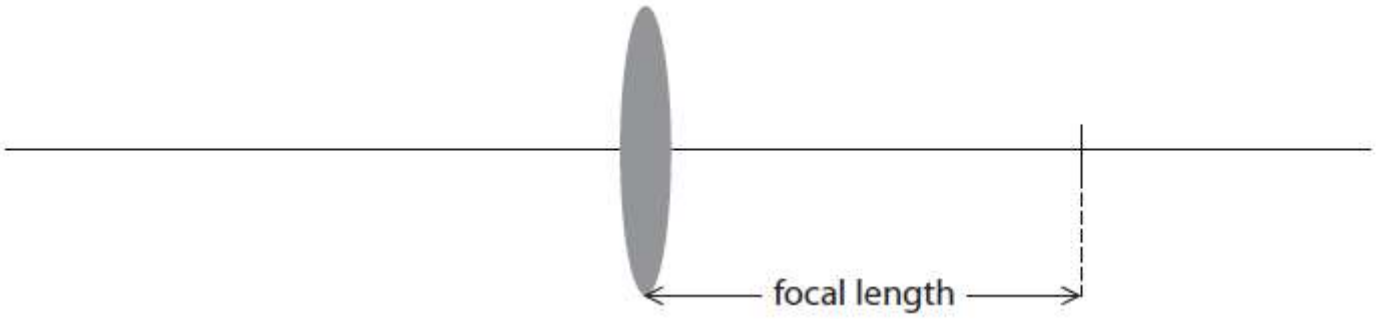

(b) An object is placed 8.5 cm in front of a converging lens of focal length 12.0 cm.

Calculate the image distance.

(4)

image distance = ... cm

(Total for Question = 8 marks)

Q7.

(a) The diagram shows a thin lens placed at the 20 cm mark of a metre rule.

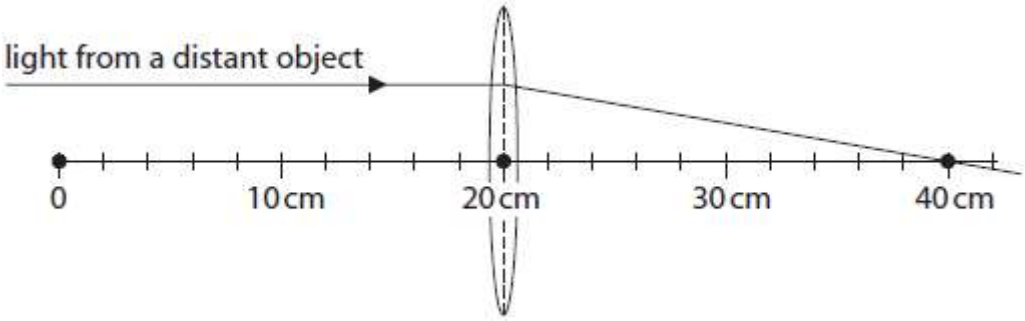

A ray has been drawn from a distant object.
Complete the sentence by putting a cross (☒) in the box next to your answer.
The focal length of the lens is

(1)

☐ **A** 10 cm
☐ **B** 20 cm
☐ **C** 30 cm
☐ **D** 40 cm

(b) The linear magnification of a thin lens is given the symbol *M*.
The following equation for *M* is used for lenses in cameras.

$$M = \frac{f}{(d - f)}$$

where *f* is the focal length of the lens and *d* is the distance between the lens and an object.
A lens has a focal length of 12 cm.

(i) Use the equation to calculate *M* when the distance from an object to the lens is 14 cm

(2)

M = ...

(ii) Use the equation to calculate *M* when the distance from an object to the lens is 11 cm

(1)

M = ...

(iii) The table shows the magnifications produced by this lens for different distances between object and lens.

d / cm	*M*
3.0	−1.3
9.0	−4.0
15	4.0
21	1.3

Suggest what the sign of *M* indicates about the image produced by the lens.

(1)

.....

.....

Q8.

A student investigates how different surfaces radiate energy as they cool.

Figure 9 shows some of the apparatus used in a part of the investigation.

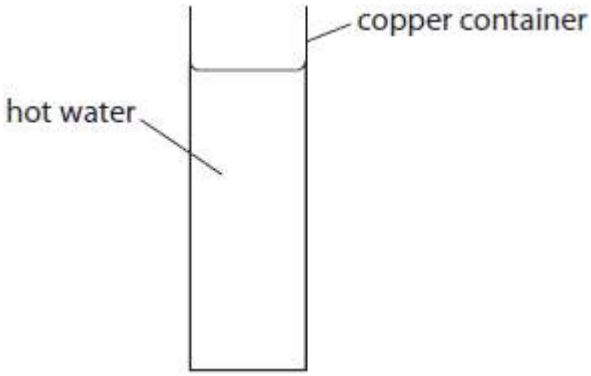

Figure 9

Describe how the student could collect data to show how the rate of cooling of the container and water change with time.

(2)

.....

.....

.....

.....

(Total for question = 2 marks)

Q9.

The following descriptions describe waves from different parts of the electromagnetic spectrum.

Complete each description by adding the name of the wave.

Use the name of each wave only once. Each description refers to a different part of the electromagnetic spectrum.

(4)

Description 1

used in cooking

used in short-range communication

typical wavelength 900 nm

name of wave .....

Description 2

used in cooking

used in communication

typical wavelength 150 mm

name of wave .....

Description 3

used in communication

produced by oscillations in electrical circuits

typical wavelength 150 m

name of wave .....

Description 4

used in medical scanning

is emitted by the nucleus of an atom

typical wavelength 2.0×10^{-3} nm

name of wave .....

(Total for question = 4 marks)

Q10.

Answer the question with a cross in the box you think is correct ☒ . If you change your mind about an answer, put a line through the box ☒ and then mark your new answer with a cross ☒ .

This question is about different types of electromagnetic radiation.

Which type of radiation can cause free electrons to oscillate in an electrical circuit?

(1)

☐ **A** infrared

☐ **B** radio waves

☐ **C** ultraviolet

☐ **D** X-rays

(Total for question = 1 mark)

Q11.

Figure 9 shows a ray of light from a ray box passing through a semi-circular glass block.

A student uses the apparatus in Figure 9 to determine the critical angle for glass.

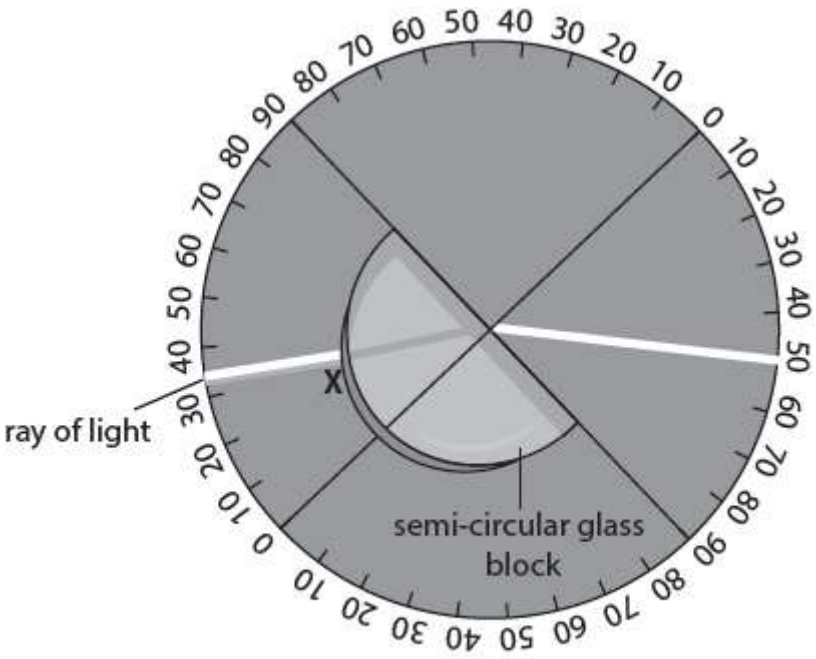

Figure 9

(i) State why the ray of light does not change direction as it enters the glass block at **X**.

(1)

.....

.....

(ii) Describe how the critical angle for glass can be determined using the apparatus shown in Figure 9.

(3)

.....

.....

.....

.....

.....

.....

(Total for question = 4 marks)

Mark Scheme

Q1.

Question Number	Answer	Additional guidance	Mark
	an explanation linking: (the colours have) different wavelengths (1) different wavelengths / colours travel at different speeds (1) so refract by different amounts (1)	 allow the word frequencies for wavelengths for refract allow bend/change direction/follow different path	(3) AO 2 1

Q2.

	Answer	Acceptable answers	Mark
(i)	An explanation linking any three of the following: (Optical fibres) bend (1) some fibres carry light to the inside of the patient (1) some fibres transmit the reflected light (1) light passes up/down fibres by TIR (1) light is reflected inside the patient (1) image is analysed by computer (1)	Accept suitable labelling on a Diagram Image projected on a screen	**(3)**
(ii)	Either Breaks/blasts/smashes (1) Kidney stones (1) or Energy absorbed (1) to help repair muscle tissue (1) or Use of gel (1) to prevent loss of	bruising/clots increases blood flow Allow (1) mark for suitable diagnosis e.g. prenatal scan	**(2)**

	intensity (1) or		

Q3.

Question Number	Answer	Acceptable answers	Mark
	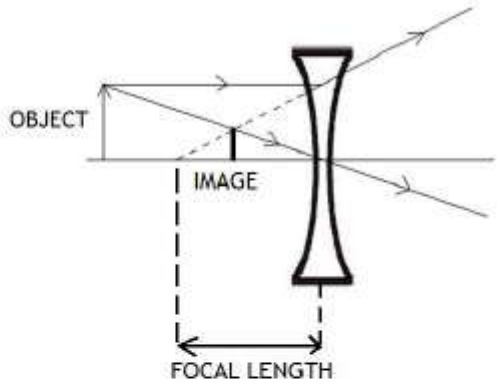	Accept symbols I and f Ignore arrow on image	**(2)**
(i)	Image, line at right angles to principal axis to where rays cross. Judge by eye (1)		
(ii)	Focal length, distance from where virtual ray crosses principal axis to centre of concave lens. Judge by eye (1)		

Question Number	Answer	Acceptable answers	Mark
(iii)	Short sight / short sightedness	Myopia/ myopic/ near sight	**(1)**

Question Number	Answer	Acceptable answers	Mark
(iv)	Substitution $\frac{1}{0.5} + \frac{1}{v} = \frac{1}{-0.33}$ (1) Transformation $\frac{1}{-0.33} - \frac{1}{0.5}$ (1) Evaluation $\left(\frac{1}{v}\right) = -3 - 2 = -5$ (1) $\left(v\right) = -0.2$ (m) (1)	Substitution and transformation in any order -5.03 gets 3 marks +5, +5.03 gets 2 marks Any value that rounds up to + or - 0.2 m/ + or - 20 cm gets 4 marks Allow power of ten error for 3 marks Correct answer with no working awarded 4 marks	**(4)**

Q4.

	Answer	**Acceptable answers**	**Mark**
(i)	An explanation linking the following points: black (1) (because) (good) absorber (of thermal radiation) (1)	absorbs / takes in heat radiation **ignore** references to: attract good emitter light dark / darker	**(2)**
(ii)	an explanation linking any **three** of the following points: • (bag / water) absorbs thermal energy / heat / radiation (1) • (bag / water) radiates / emits	idea of energy input e.g. "sun heats the bag up" idea of energy output idea of more heat lost (to surroundings)at higher	**(3)**

	thermal energy / heat / radiation (1) • more heat radiated at higher temperature (1) • input and output are balanced (at steady temperature) (1)	temperature "absorbing heat at same rate as radiating heat" (3) **ignore** (sun) light / rays	

Q5.

Question Number	Answer	Acceptable answers	Mark
(i)	**B** either real or virtual / either magnified or diminished		(1)

Question Number	Answer	Acceptable answers	Mark
(ii)	A description including:- Effect of change in shape (1) AND Gives greater/ larger power (1) The second mark is dependent on the first	 greater refraction/ more bending (of light) greater curvature / fatter / more curved/ thicker lens shorter focal length / shorter f Or reverse argument Credit clear labelled diagrams that show this difference.	(2)

Q6.

Question Number	Answer	Acceptable answers	Mark
(a)(i)	D both real and virtual images		**(1)**

Question Number	Answer	Acceptable answers	Mark
(a)(ii)	A 8.3 dioptre		**(1)**

Question Number	Answer	Acceptable answers	Mark
(a)(iii)	Diagram showing Convex lens, wider at the centre and more curved (1) shorter focal length identifiable (1)	Lens can be redrawn anywhere on the diagram	**(2)**

Question Number	Answer	Acceptable answers	Mark
(b)	substitution (1) 1/12= 1/8.5 + 1/v transposition (1) (1/v) = 1/12 - 1/8.5 evaluation (1) (1/v) = -0.034 Inversion (1) v = -29(cm)	substitution and transposition in any order 0.034,-7/204,7/204, 0.03,-0.03 (3) Ignore signs until final value of v is given. -29.1(cm) -29.14(cm) Allow answers that can be rounded down to -29(cm) full marks for the correct numerical answer with no working (-)204/7 or 29(cm) with no working gains 3 marks	**(4)**

(Total marks for question = 8 marks)

Q7.

Question Number	Answer	Acceptable answers	Mark
(a)	**B** 20 cm		**(1)**

Question Number	Answer	Acceptable answers	Mark
(b) (i)	Substitution 12/(14-12) (1) Evaluation 6.0 (1)	Award full marks for correct with no working Ignore any units	**(2)**

Question Number	Answer	Acceptable answers	Mark
(b) (ii)	-12	Negative sign essential	**(1)**

Question Number	Answer	Acceptable answers	Mark
(b) (iii)	Suggestion to include one of: • Shows whether it is real or virtual (1) • A positive sign for magnification indicates a {real image/inverted image/opposite side of lens to object} (1)	 Allow shows whether it is inverted or upright Allow shows which side of lens image is formed A negative sign for magnification indicates a {virtual image/upright image/same side of lens as object} IGNORE simple reference to magnification	**(1)**

Q8.

Question Number	Answer	Additional guidance	Mark
	a description to include: use a thermometer (1) measure temperature at regular intervals (1)	 temp. sensor datalogger it must be clear that it is a number of readings – not just 2 eg measure temperature over time	**(2)** AO 1 2

Q9.

Question Number	Answer	Additional guidance	Mark
	in this order infrared (wave) / IR (1) micro(wave) (1) radio (wave) (1) gamma (ray/wave)(1)	 accept μ(wave) accept γ not X	**(4)** AO 1 1

Q10.

Question number	Answer	Additional guidance	Marks
	B radio waves	Multiple choice	(1)

Q11.

Question	Answer	Additional guidance	Mark
(i)	any one from the light enters the block at 90° (to the surface of the block) (1) the light enters the block at right angles (to the surface of the block) (1) the light enters the block perpendicular (to the surface of the block) (1) the light enters (the block) along/at the normal (1) the angle of incidence (when light enters block) is 0° (1)		**1** **AO3.3**

Question	Answer	Additional guidance	Mark
(ii)	a description to include three from the following to increase the angle in the glass / angle of incidence (1) observe the refracted beam until the angle of refraction is 90° / the beam is along the edge / the beam just reflects into the glass block / the beams starts to total internally reflect (1) the angle in the glass / angle of incidence is the critical angle (1) repeat and take the average value(1)	 accept move ray clockwise if no other mark scored award 1 mark	3 AO3.3
		for move the ray of light	