Questions

Q1.

Bees have several colours.

Which of these colours appears in a pure spectrum of visible light?

Put a cross (☒) in the box next to your answer.

(1)

☐ **A** black

☐ **B** brown

☐ **C** white

☐ **D** yellow

Q2.

X-rays can be useful and harmful to humans.

(i) State **one** way that x-rays are useful to humans.

(1)

.....

(ii) State **one** way that x-rays are harmful to humans.

(1)

.....

(Total for question = 2 marks)

Q3.

Some students repeat Herschel's experiment.
Then the four thermometers are placed in the spectrum of sunlight as shown.

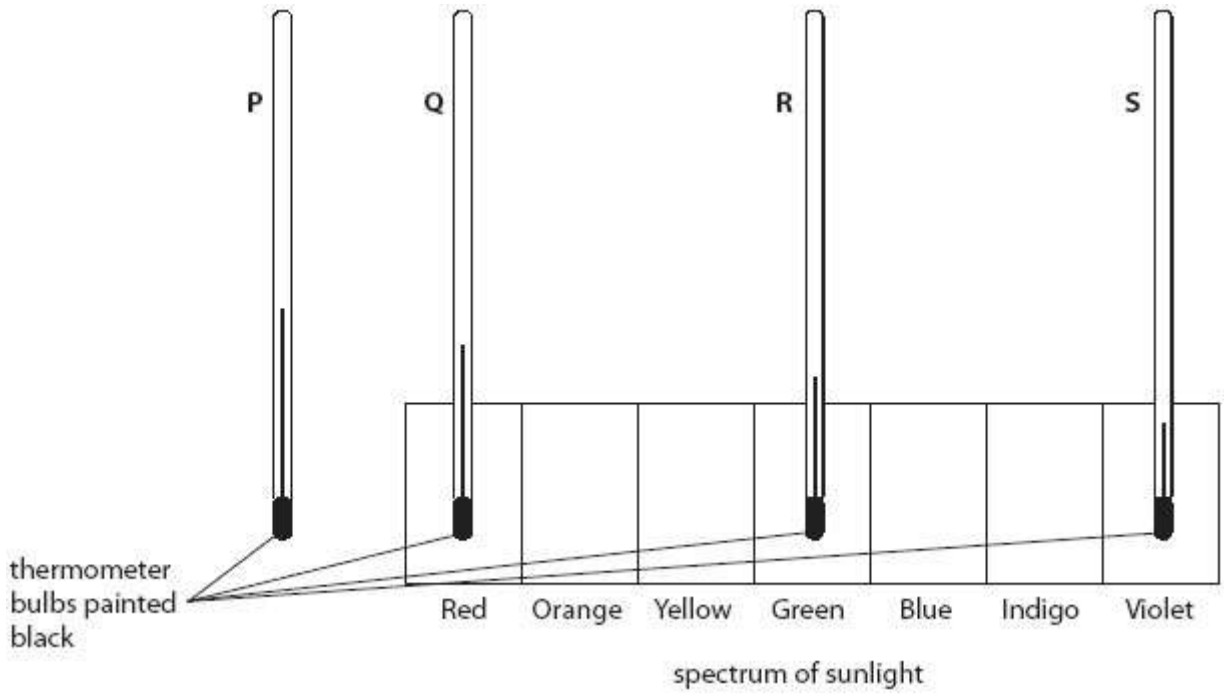

(i) The bulbs of the thermometers are painted black.

State why the bulbs of the thermometers are painted black.

(1)

.....

.....

(ii) The table shows the readings on the thermometers in the spectrum of sunlight.

	thermometers in the spectrum of sunlight			
	P	**Q**	**R**	**S**
temperature / °C	25	23	21	20

Describe conclusions that can be made from the students' results.

(2)

.....

.....

.....

.....

(iii) State why the students put the four thermometers together in the shade before placing them in the spectrum
of sunlight.

(1)

.....

.....

Q4.

(i) Use words from the box to complete the sentences below about ions.

absorbing	gaining	inner	losing	outer

(2)

Atoms may form positive ions by ..... electrons.

The electrons involved in forming positive ions are the ..... electrons.

(ii) Which of these radiations is both electromagnetic and ionising?

(1)

☐ **A** alpha

☐ **B** beta minus

☐ **C** gamma

☐ **D** neutron

(iii) Which type of radiation will travel the shortest distance in air?

(1)

☐ **A** alpha

☐ **B** beta minus

☐ **C** beta plus

☐ **D** gamma

(Total for question = 4 marks)

Q5.

Some students repeat Herschel's experiment.
Another scientist, Ritter, discovered ultraviolet radiation.
(i) Complete the sentence by putting a cross (■) in the box next to your answer.

Too much exposure to ultraviolet radiation may cause

(1)

☐ **A** deafness

☐ **B** heating of internal body cells

☐ **C** damage to the eyes

☐ **D** damage to the bone cells

(ii) Three signals, ultraviolet, visible light and infrared, are sent from the surface of the Moon to an orbiting spacecraft.

The three signals are sent at the same time.

Which of these is correct for the signals arriving at the spacecraft?

Put a cross (■) in the box next to your answer.

(1)

☐ **A** the visible light signal arrives first

☐ **B** the ultraviolet signal arrives first

☐ **C** the infrared signal arrives first

☐ **D** all three signals arrive at the same time

(iii) Describe **one** use of ultraviolet radiation.

(2)

.....

.....

.....

.....

Q6.

A student investigates how light is reflected from a plane mirror.

Figure 10 shows part of the student's investigation.

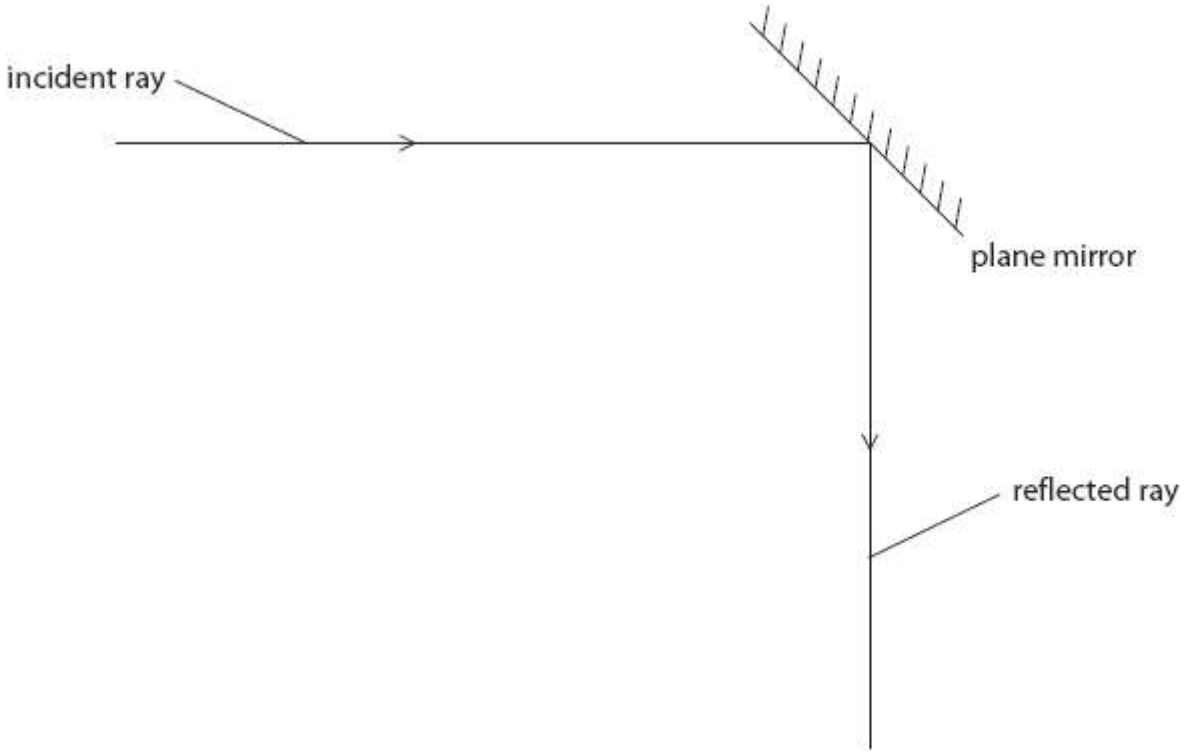

Figure 10

(i) Complete the diagram to show

- the normal
- the angle of incidence (*i*) and the angle of reflection (*r*).

(2)

(ii) Figure 11 shows a ray of light travelling through a 45° glass prism.

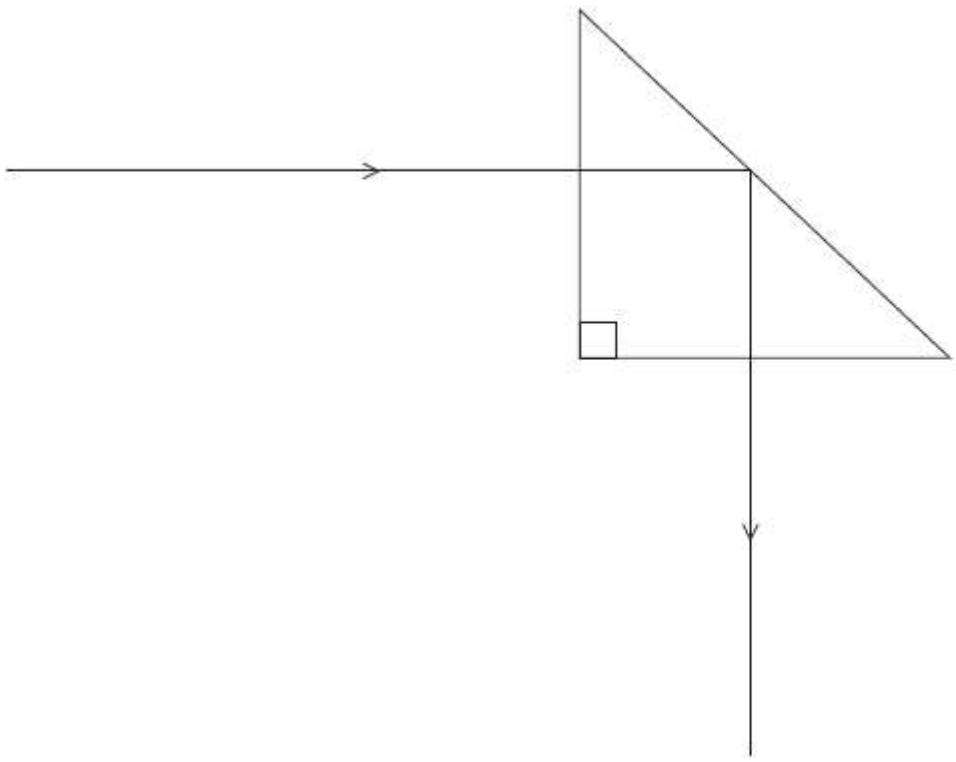

Figure 11

State what can be deduced from this diagram about the value of the critical angle for glass.

(1)

.....

.....

(Total for question = 3 marks)

Q7.

When light strikes a glass surface it can be both refracted and reflected.
The diagram shows the possible paths for a ray of light which strikes a surface at the point O.

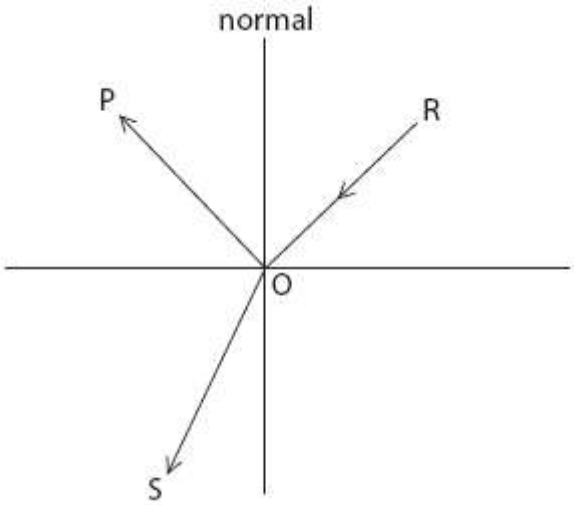

(i) Which of the lines show the possible path of a ray of light passing from air into glass?
Put a cross ( ) in the box next to your answer.

(1)

☒ **A** POS

☒ **B** POR

☒ **C** ROP

☒ **D** ROS

(ii) The diagram shows a water wave going from deep water into an area of much shallower water. The wave is refracted at the boundary between deep water and shallow water.

Which row of the table is correct for what happens when the wave is refracted?
Put a cross ( ) in the box next to your answer.

(1)

	speed	direction
☐ A	stays the same	changes
☐ B	stays the same	stays the same
☐ C	changes	changes
☐ D	changes	stays the same

Q8.

Figure 8 shows a section of the electromagnetic spectrum.

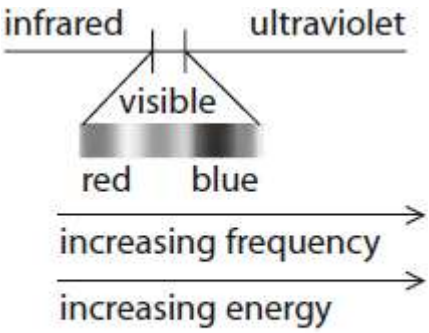

Figure 8

(i) State **one** type of electromagnetic radiation that has a higher frequency than ultraviolet.

(1)

.....

(ii) One star is blue and another star is red.

Explain why an astronomer expects the blue star to be hotter than the red star.

(2)

.....

.....

.....

.....

(Total for question = 3 marks)

Q9.

Here are four uses of radioactivity.
Draw a line from each one of them to the type of radiation it uses.

Each type of radiation may be chosen once, more than once or not at all.

(4)

Use of radioactivity	Type of radiation it uses
sterilisation of medical equipment	alpha
household fire (smoke) alarm	beta
gauging thickness of cardboard	gamma
irradiating food	

Q10.

(i) Give **one** colour of light that has a longer wavelength than yellow light.

(1)

.....

(ii) Give **one** colour of light that has a higher frequency than yellow light.

(1)

.....

(Total for question = 2 marks)

Q11.

(a) Galileo was one of the first scientists to use a telescope to study Venus.

(i) Which of these diagrams best shows how light waves enable us to see Venus?

Put a cross ( ) in the box next to your answer.

(1)

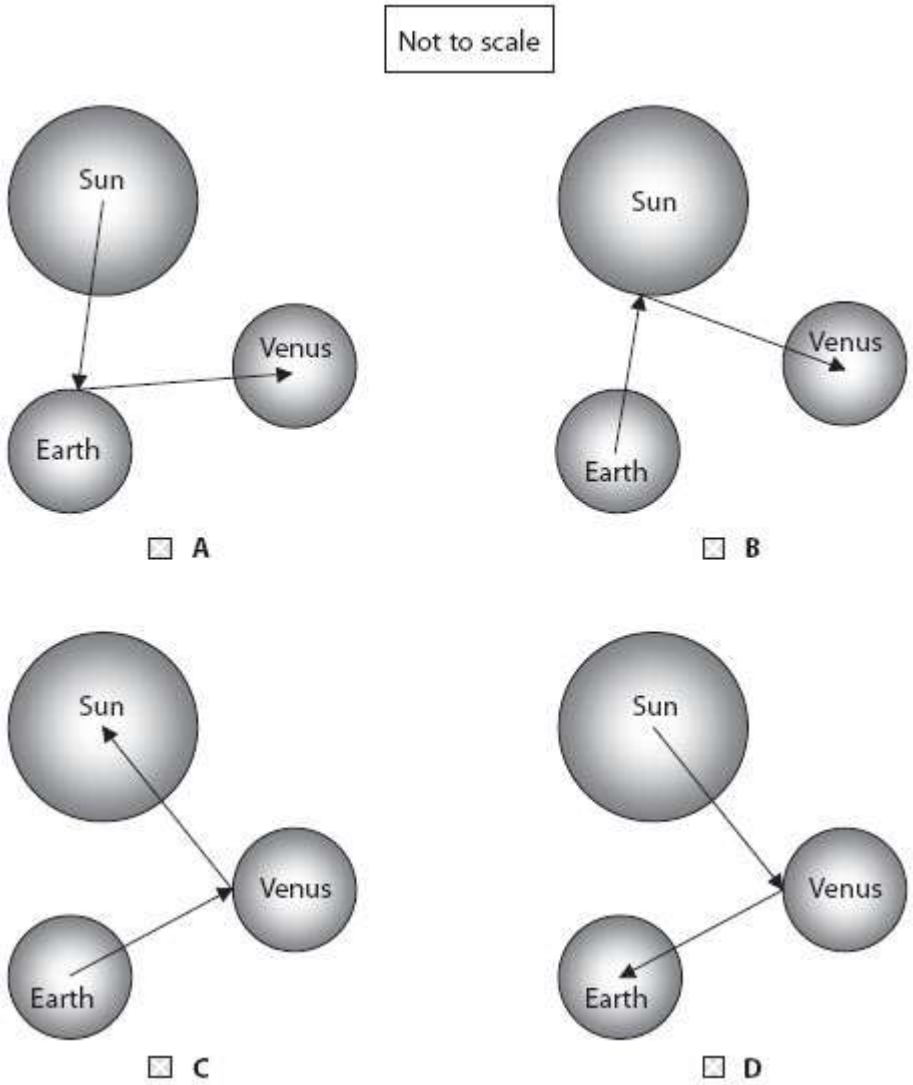

(ii) Use words from the box to complete the sentences.

(2)

asteroids	comets	geocentric	heliocentric
	moons	particle	stars

Galileo also used his telescope to observe the ..... of Jupiter.
His observations provided evidence to support the ..... model of the Solar System.

(iii) Describe how a reflecting telescope is different from the simple telescope which Galileo used.

(2)

.....

.....

.....

.....

(b) (i) The diagram represents a wave.

State the amplitude and wavelength of the wave.

(2)

.....

.....

(ii) 20 waves are sent out in 4 seconds.

Complete the sentence by putting a cross ( ) in the box next to your answer.

The frequency of the wave is

(1)

☐ **A** 0.2 Hz

☐ **B** 5 Hz

☐ **C** 20 Hz

☐ **D** 80 Hz

(Total for Question is 8 marks)

Mark Scheme

Q1.

Question Number	Answer	Acceptable answers	Mark
	D yellow		**(1)**

Q2.

Question number	Answer	Additional guidance	Mark
(i)	One from: seeing (broken) bones (1) radiotherapy (1) detecting cracks in metals (1) airport security (1) observing the internal structure of objects(1)	seeing inside the body	**(1)** **AO1**

Question number	Answer	Additional guidance	Mark
(ii)	One from: can cause cancer (1) can cause burns(1) {damage/kills/harms} cells/tissue (1) mutates DNA/cells (1)	harms organ(s) / foetus allow (highly) ionising	**(1)** **AO1**

Q3.

	Answer	Acceptable answers	Mark
(i)	(black is the) best absorber (of radiation/heat)(compared to other colours) (1)	(Black/it) absorbs more (Black/it) is a good absorber (of radiation/heat) (black is) good at taking in (radiation/heat) Ignore (black is a) good emitter Ignore light. Reject black attracts heat/radiation	**(1)**
(ii)	• Heating effect/temperature greatest at/beyond red (1) • (There is) radiation beyond red (end of spectrum)(1)	(idea of) different colours have different heating effects (Radiation from) sunlight causes a heating effect accept reverse argument Infrared/IR (beyond red end of spectrum)	**(2)**
(iii)	Any **one** from • To check the thermometers produce the same readings/ temperature (under the same conditions) (1) • To show that temperature changes.	(To check) they were all at the same temperature (before starting the experiment.) To be able to make a comparison (between shade and light) (To allow them to carry out a) fair test	**(1)**

Q4.

Question Number	Answer	Additional guidance	Mark
(i)	Atoms may form positive ions by **losing** electrons. (1) The electrons involved are the **outer** electrons (1)	accept any clear indication that correct word is in gap	**(2)**

Question Number	Answer	Mark
(ii)	The only correct answer is **C gamma** A is not correct because alpha radiation is not electromagnetic B is not correct because beta minus radiation is not electromagnetic D is not correct because neutron radiation is not electromagnetic	(1)

Question Number	Answer	Mark
(iii)	The only correct answer is **A alpha** B is not correct because beta minus travels further in air than alpha C is not correct because beta plus travels further in air alpha D is not correct because gamma travels further in air than than alpha and beta	(1)

Q5.

	Answer	Acceptable answers	Mark
(i)	C damage to the eyes (1)		(3)
(ii)	D all three signals arrive at the same time (1)		(1)
iii	Description linking **one** of the following pairs: • security marking (1) • ink absorbs UV and re-radiates (visible) light (1)	invisible ink/smart water glows under UV (outside of) lamp glows when hit by UV forgeries/fake bank notes/passports/fingerprints/ body fluids	(2)

	• fluorescent lamps (1) • coating absorbs UV and reradiates (visible) light (1) • genuine bank notes (1) • watermark absorbs UV and reradiates (visible) light (1) • disinfecting water (1) • UV kills bacteria (1) • sun beds (1) • UV absorbed by (melanin in) skin (1) Any suitable use gains 1 mark Any suitable use + detail gains 2 marks	etc markings glow under UV tanning beds tans the skin /the body e.g. disco lighting (1) makes clothing glow (1)	

Q6.

Question number	Answer	Additional guidance	Mark
(i)	normal drawn correctly (1) angles of incidence and reflection shown correctly (1)	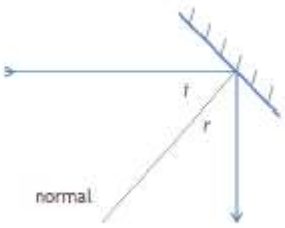	**(2)**

Question number	Answer	Additional guidance	Mark
(ii)	The critical angle must be less than 45° (1)		**(1)**

Q7.

	Answer	Acceptable answers	Mark
(i)	☒D ROS		(1)
(ii)	☒C changes changes		(1)

Q8.

Question Number	Answer	Additional guidance	Mark
(i)	one of: X-ray(s) (1) gamma (rays) (1)	 X γ any other waves mentioned contradicts	(1)

Question Number	Answer	Additional guidance	Mark
(ii)	an explanation linking **two** from: blue (star) emits light at higher energy (than red) blue has shorter wavelength/ higher frequency than red so blue star has higher (surface) temperature than red	or reverse arguments	(2)

Q9.

	Answer	Acceptable answers	Mark
	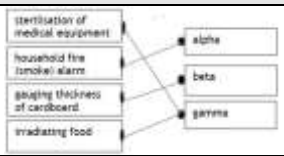	one mark for each correct line	(4)

Q10.

Question Number	Answer	Mark
(i)	red **or** orange	(1) AO 1 1

Question Number	Answer	Additional guidance	Mark
(ii)	green **or** blue **or** indigo **or** violet		(1) AO 1 1

Q11.

	Answer	Acceptable answers	Mark
(a)(i)	D		**(1)**
(a)(ii)	moons (1) heliocentric (1)	must be in correct order	**(2)**
(a)(iii)	A description including two of the following points Reflecting telescope has mirror(s) (1) Galilean telescope has only lenses (1) Reflecting telescope can gather more light / can have a larger objective (1) Image viewed from the side of reflecting telescope (1) Image viewed from end of Galilean telescope. (1)	refracting telescope reverse argument	**(2)**
(b)(i)	5 (cm) (1) 8 (cm) (1)	+5 -5 0.08 m 80 mm	**(2)**
(b)(ii)	B		**(1)**