Questions

Q1.

Figure 11 shows a wind turbine.

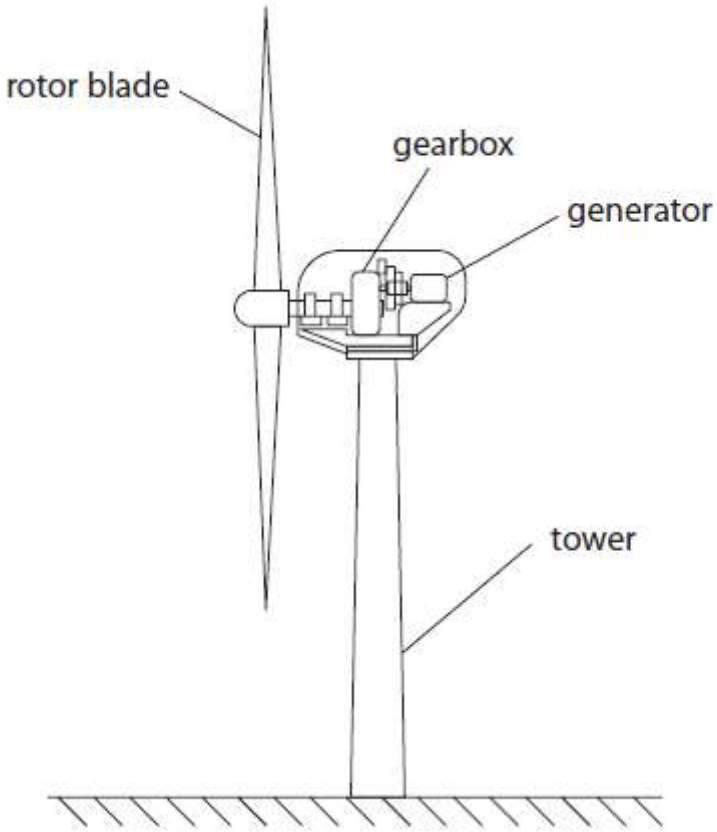

Figure 11

Explain how unwanted energy transfers could be reduced in the gear box.

(2)

.....

.....

.....

.....

(Total for question = 2 marks)

Q2.

A house has a boiler to provide hot water.

One type of boiler burns natural gas.

Natural gas is a non-renewable source of energy.

(i) State a renewable source of energy that could be used to heat water in a house.

(1)

.....

Figure 14 shows some information in a booklet supplied with a gas boiler.

fuel	natural gas
temperature of hot water	65°C
energy supplied to the boiler in one second	7500 J
efficiency of boiler	96%

Figure 14

(ii) Calculate the energy transferred to the water by the boiler in one second.

(2)

energy transferred to water = ... J

(Total for question = 3 marks)

Q3.

Figure 8 shows apparatus set up to investigate the speed of a falling object.

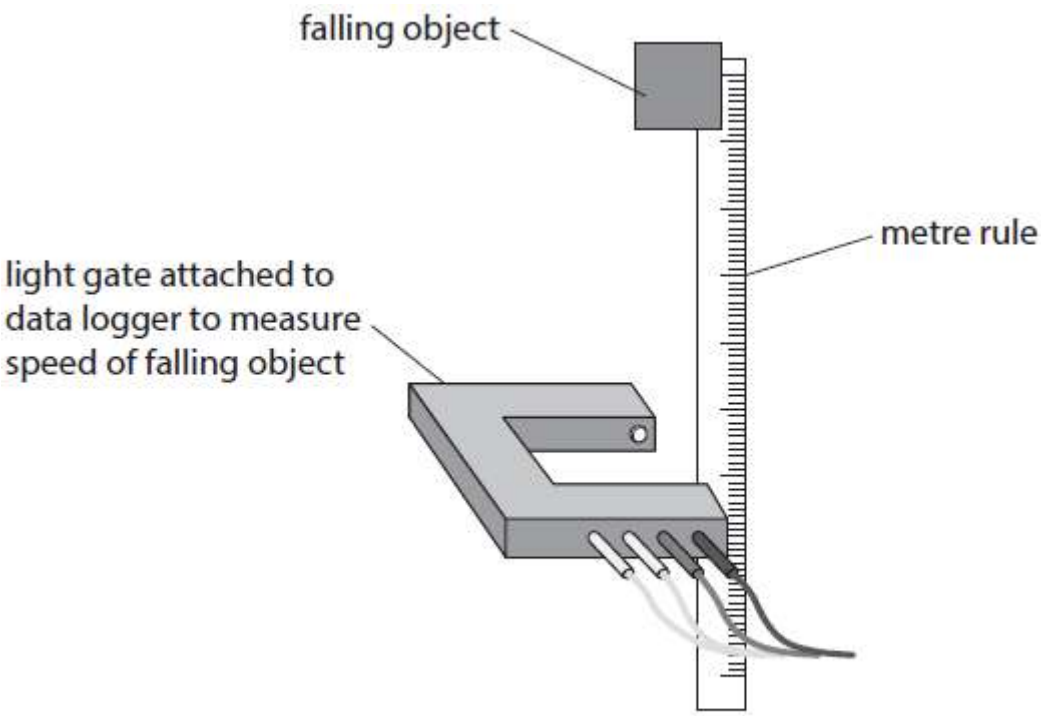

Figure 8

The object is dropped from rest at the position shown.
The object falls through the light gate.

(i) The speed of the object, after it has fallen through a height, h, is measured by the light gate.

Label Figure 8 to show the height, h.
Your label should look like this

(1)

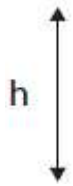

(ii) The speed is measured at least four times for each drop height.

Give **one** reason for repeating the measurements.

(1)

.....

.....

(iii) The metre rule shown in Figure 8 is used to measure the height, h.

Suggest **two** ways to make the measurement of h as accurate as possible.

(2)

1 .....

.....

2 .....

.....

(Total for question = 4 marks)

Q4.

A different cyclist uses a motorised bicycle.

The motorised bicycle is powered by an electric motor.

Figure 3 is an energy diagram for the motor.

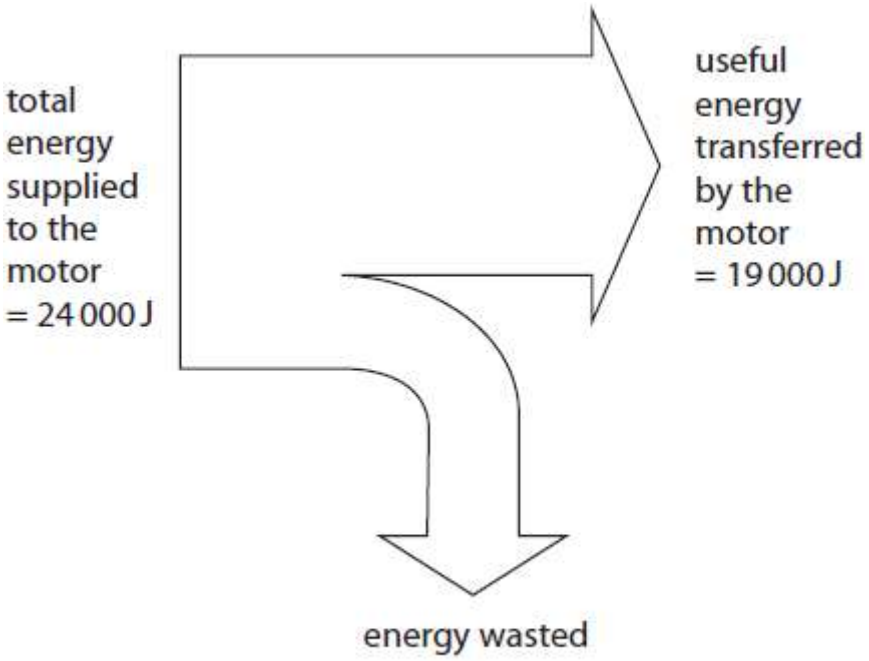

Figure 3

(i) Calculate how much energy is wasted.

(1)

energy wasted = ... J

(ii) Calculate the efficiency of the electric motor.

(2)

Use the equation:

$$\text{efficiency} = \frac{\text{(useful energy transferred by the device)}}{\text{(total energy supplied to the device)}}$$

efficiency of electric motor = ...

(Total for question = 3 marks)

Q5.

Figure 2 shows an energy transfer diagram for a steam engine.

The diagram shows the amounts of energy transferred each second by the steam engine.

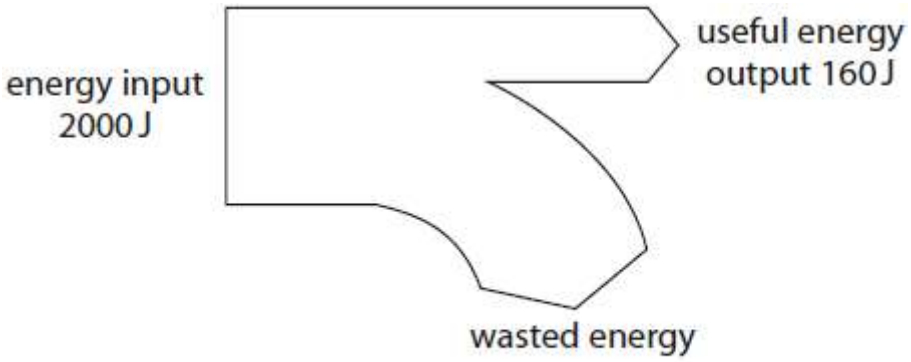

Figure 2

(i) Calculate the amount of wasted energy.

(1)

wasted energy = ... J

(ii) Calculate the efficiency of the steam engine.

Use the equation

$$\text{efficiency} = \frac{\text{(useful energy transferred by the steam engine)}}{\text{(total energy supplied to the steam engine)}}$$

(2)

efficiency = ...

(iii) State what happens to the wasted energy.

(1)

.....

.....

(iv) Coal is a fossil fuel that is burnt in some steam engines.

State **two** ways that the use of coal might be harmful to the environment.

(2)

1 .....

.....

2 .....

.....

(Total for question = 6 marks)

Q6.

A cyclist has a mass of 64 kg.

(i) The cyclist rides from a flat road to the top of a hill.

The top of the hill is 24 m above the flat road.
Calculate the gain in gravitational potential energy, ΔGPE, of the cyclist.
Use g = 10 N/kg
Use the equation

$$\Delta GPE = m \times g \times \Delta h$$

(2)

gain in gravitational potential energy = ... J

(ii) The cyclist returns to the flat road.

The mass of the cyclist is 64 kg.
Calculate the kinetic energy of the cyclist when the cyclist is travelling at 6.0 m/s.
Use the equation

$$KE = \frac{1}{2} \times m \times v^2$$

(3)

kinetic energy = ... J

(iii) The cyclist then uses the brakes on the bicycle to stop.

Explain what happens to the kinetic energy of the cyclist.

(2)

.....

.....

.....

.....

(Total for question = 7 marks)

Q7.

Figure 7 shows a truck lifting a box.

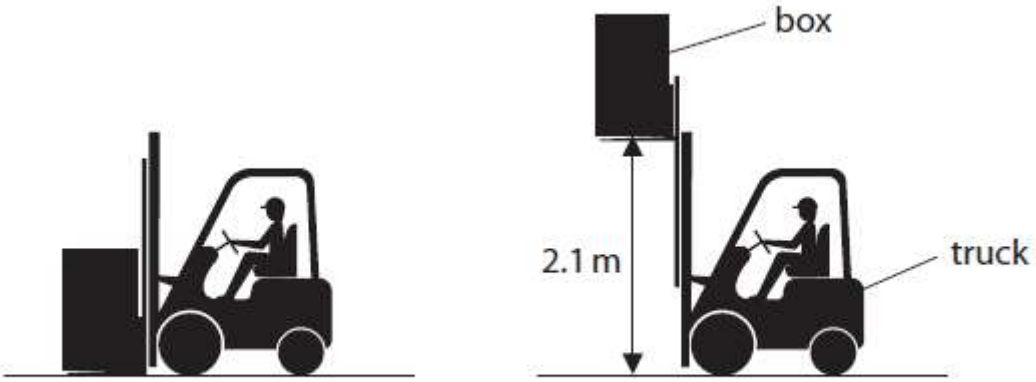

Figure 7

The box has a mass of 57 kg.
The truck lifts the box through a vertical height of 2.1 m.
The gravitational field strength, g = 10 N/kg
Calculate the change in the gravitational potential energy of the box.
Use the equation

$$\Delta GPE = m \times g \times \Delta h$$

(2)

change in gravitational potential energy = ... J

(Total for question = 2 marks)

Q8.

Figure 3 shows the energy transferred by one solar panel in one second.

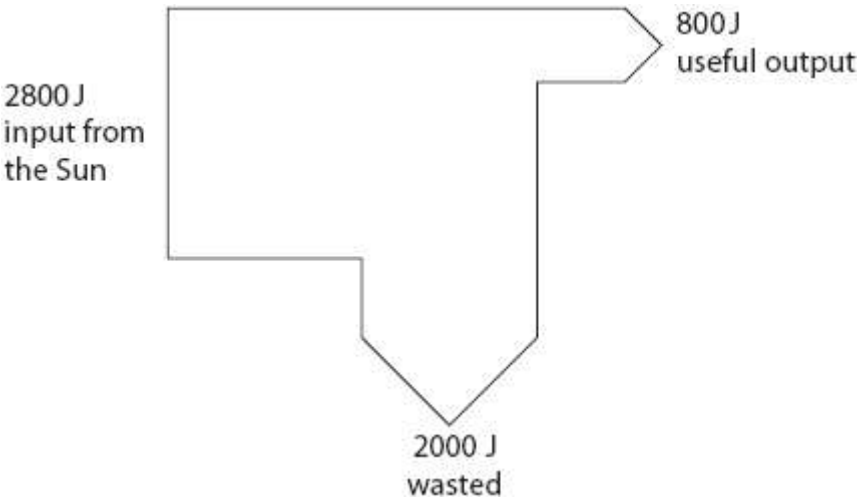

Figure 3

(i) Use the information in Figure 3 to calculate the efficiency of the solar panel in generating electricity.

(3)

efficiency = ...

(ii) Give a reason why some of the energy reaching the panel from the Sun is not used to generate electricity.

(1)

.....

.....

(Total for question = 4 marks)

Q9.

Figure 14 is an energy diagram for an electric kettle, used to heat water.

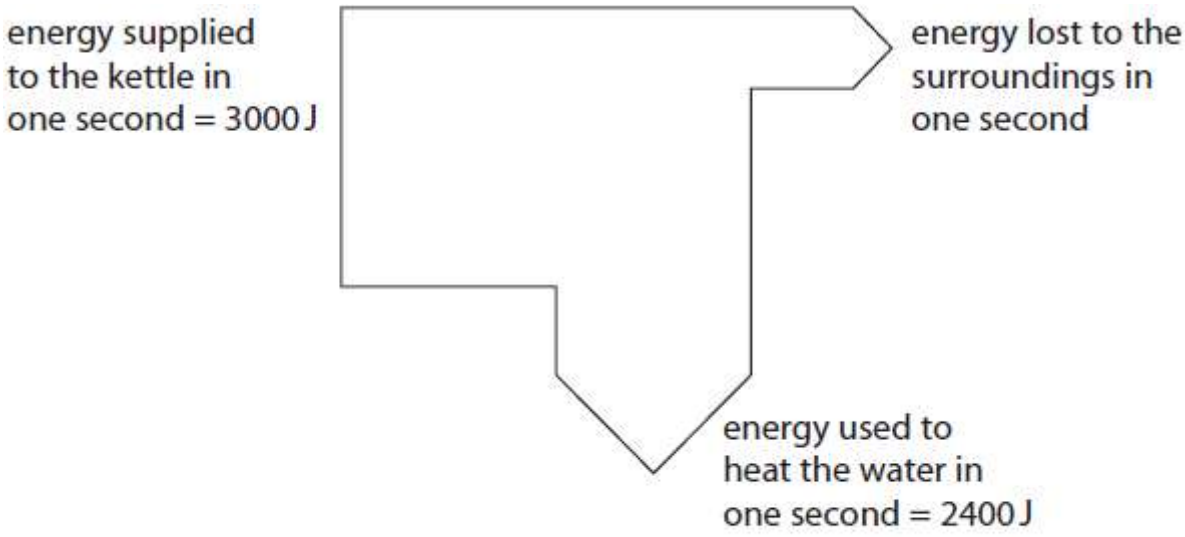

Figure 14

(i) Calculate the amount of energy lost to the surroundings in one second.

(1)

Energy lost to the surroundings in one second = ... J

(ii) Calculate the efficiency of the kettle.
Use the equation.

$$\text{efficiency} = \frac{\text{useful energy transferred by the kettle in one second}}{\text{total energy supplied to the kettle in one second}}$$

(2)

efficiency .....

(Total for question = 3 marks)

Q10.

Figure 18 shows a person on a skateboard at the top of a ramp.

At P, the person is not moving.

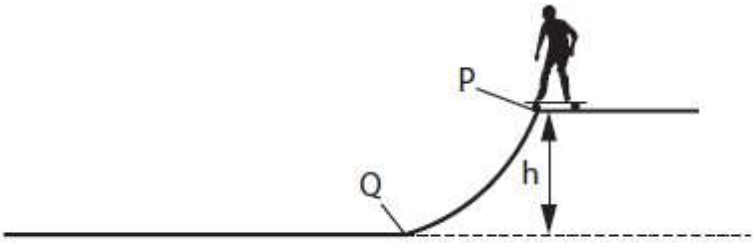

Figure 18

The person rides the skateboard down the ramp from P to Q.

The gravitational potential energy of the person decreases by 980 J.

The mass of the person is 35 kg.

Calculate h, the height of the ramp.

Use g = 10 N/kg.

Use the equation

$$\text{change in gravitational potential energy} = m \times g \times h$$

(2)

h = ... m

(Total for question = 2 marks)

Mark Scheme

Q1.

Question Number	Answer	Additional guidance	Mark
	an explanation linking use of lubrication / oil (1) to reduce friction (between parts) (1)		(2) AO 2 1

Q2.

Question number	Answer	Additional guidance	Mark
(i)	Any one of: solar panel (1) bio-gas (1) geothermal (1)	reject wind unless reference made to electrical heater supplied by wind-powered dynamo.	(1)

Question number	Answer	Additional guidance	Mark
(ii)	substitution and rearrangement (1) efficiency. = useful energy / total energy 0.96 x 7500 evaluation (1) 7200 (J)	full marks will be awarded for correct numerical answer without working	(2)

Q3.

Q4.

Question number	Answer	Additional guidance	Mark
(i)	5000(J)	24 000 – 19 000	(1) AO2

Question number	Answer	Additional guidance	Mark
(ii)	substitution (1) (efficiency =)$\frac{19000}{24000}$ (x100%) evaluation(1) 0.79 or 79%	 allow 0.8 do not award 79 without percentage award full marks for correct answer without working.	(2) AO2

Q5.

Question Number	Answer	Additional guidance	Mark
(i)	1840 (J) (1)		(1)

Question Number	Answer		Mark
(ii)	substitution (1) (efficiency =) $\frac{160}{2000}$ evaluation (1) 0.08 OR 8 (%)	 Ignore any units award full marks for the correct answer without working	(2)

Question Number	Answer	Additional guidance	Mark
(iii)	reference to : thermal (energy) (1) OR (lost to) environment /surroundings/dissipated (1) OR transferred/changed to another form of energy (1)	IGNORE gets re-used / recycled heat OR (to) atmosphere / (to) the air /sky/ steam accept named form of energy	(1)

Question Number	Answer	Additional guidance	Mark
(iv)	an answer that makes reference to **any two from**	IGNORE unqualified pollutes/pollution IGNORE ozone layer IGNORE non-renewable IGNORE 'fumes'	(2)
	produces/ releases/makes/gives off carbon dioxide / CO_2 /greenhouse gases (1)	(causes) greenhouse effect OR contributes to global warming/climate change allow CO2	
	produces carbon monoxide / CO (1)	causes carbon monoxide poisoning	
	produces air pollution (1)	accept (harmful) particles /dust	
	produces sulphur dioxide/ $SO_{(2)}$ (1)	causes <u>acid rain</u>	
	produces soot /smoke (1)	blackens/ stains buildings/statues	
	mining coal (1)	slag heaps/ mining damages the landscape/habitats/ecosystem OR ground needs to be dug up	

Q6.

Question number	Answer	Additional guidance	Mark
(i)	substitution (1) (ΔGPE =) 64 x 10 x 24 evaluation (1) 15 000 (J)	 accept 15 360(J) or 15 400(J) award full marks for correct answer without working.	(2) AO2

Question number	Answer	Additional guidance	Mark
(ii)	substitution (1) (KE=) ½ x 64 x $6^{(2)}$ calculation of 6^2 (1) evaluation (1) 1200 (J)	 accept 1152(J) award full marks for correct answer without working. 192 (J) scores 2 marks	(3) AO2

Question number	Answer	Additional guidance	Mark
(iii)	an explanation linking any **two** from: the kinetic energy (store)/it decreases (to zero) (1) (the energy) has dissipated (1) to the surroundings (1) thermal energy (store) increases (1)	 transferred to ground/brake(s) pads make the brakes hot	(2) AO2

Q7.

	Answer	Additional guidance	Mark
	substitution (1) (ΔGPE =) 57 × 10 × 2.1 evaluation (1) (ΔGPE =) 1200 (J)	 ignore attempts to convert kg to g for this MP only 1197 allow numbers that round to 1200 no ecf from MP1 award full marks for the correct answer without working.	**(2)** **AO2**

Q8.

Question number	Answer	Additional guidance	Marks
(i)	use of efficiency= $\frac{\text{useful energy transferred}}{\text{total energy supplied}}$ (1) substitution (1) 800 ÷2800 answer (1) 0.29	 allow 'input' for 'total energy' 2 marks for substituting correctly accept 28.6(%) / 29(%) / 30(%) / 28(%) 0.3 / 0.286... / 0.28 or 2/7 fraction award full marks for correct numerical answer without working	**(3)**

Question number	Answer	Additional guidance	Marks
(ii)	some light/radiation is reflected off the panels (1) **OR** idea that some energy arrives with unsuitable frequencies (1) **OR** (because some) energy is transferred into thermal stores (1)	accept 'because it/energy is reflected' e.g. infrared radiation / heat accept 'heat' for thermal accept 'form' for store ignore 'some energy is wasted'	(1)

Q9.

	Answer	Additional guidance	Mark
(i)	600 (J)	accept 3000 – 2400 accept -600	(1) **AO3**

	Answer	Additional guidance	Mark
(ii)	substitution (1) (efficiency =) $\frac{2400}{3000}$ evaluation (1) 0.8(0)	 allow $\frac{4}{5}$ accept 80 (%) award full marks for the correct answer without working allow 1.25 for 1 mark for selecting and evaluating from the correct pair of values	**(2)** **AO3**

Q10.

Question number	Answer	Additional guidance	Mark
	Substitution or rearrangement (1) 980 = 35 x 10 x h	(Δh =) $\frac{\Delta GPE}{m \times g}$ or (Δh =) $\frac{980}{35 \times 10}$ allow use of 9.8 N/kg or 9.81 N/kg allow substitution into visible incorrectly rearranged algebraic expression	**2** **AO2.1**
	evaluation (1) (h =) 2.8 (m)	allow 2.85/2.86/2.9 for use of g = 9.8 N/kg or 9.81 N/kg ignore use of negative for decrease in GPE award full marks for the correct answer without working	