Questions

Q1.

Which of the following particles is absorbed and emitted during a nuclear fission reaction?

(1)

☐ **A** electron

☐ **B** neutron

☐ **C** positron

☐ **D** proton

(Total for question = 1 mark)

Q2.

Answer the question with a cross in the box you think is correct (☒). If you change your mind about an answer, put a line through the box (☒) and then mark your new answer with a cross (☒).

Radiation is used to treat tumours (cancer).

The source of the radiation can be inside or outside the human body.

Which of these has a radiation source that can be positioned inside the body to treat tumours?

(1)

☐ **A** gamma rays
☐ **B** x-rays
☐ **C** radio waves
☐ **D** microwaves

(Total for question = 1 mark)

Q3.

Answer the question with a cross in the box you think is correct ☒. If you change your mind about an answer, put a line through the box ☒ and then mark your new answer with a cross ☒.

Which of these describes isotopes of an element?

(1)

☐ A	same atomic number	different number of neutrons
☐ B	same atomic number	different number of protons
☐ C	same mass number	different number of neutrons
☐ D	same mass number	different number of protons

(Total for question = 1 mark)

Q4.

Answer the question with a cross in the box you think is correct ☒. If you change your mind about an answer, put a line through the box ☒ and then mark your new answer with a cross ☒.

Figure 9 represents a decay that can happen inside the nucleus of an atom.

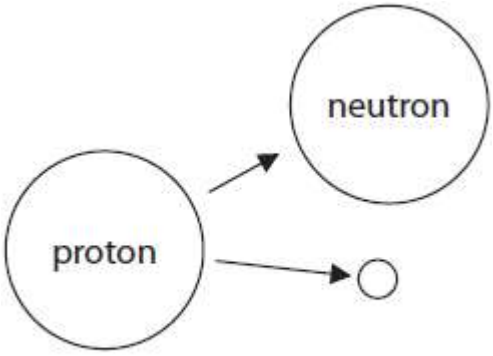

Figure 9

Which decay is represented in Figure 9?

(1)

☐ **A** alpha
☐ **B** beta minus
☐ **C** beta plus
☐ **D** gamma

(Total for question = 1 mark)

Q5.

Answer the question with a cross in the box you think is correct ☒. If you change your mind about an answer, put a line through the box ☒ and then mark your new answer with a cross ☒.

(i) In a controlled chain reaction of uranium-235, which of these could cause a

uranium-235 nucleus to undergo fission?

(1)

- ☐ **A** an alpha particle
- ☐ **B** a beta particle
- ☐ **C** a neutron
- ☐ **D** a proton

(ii) The kinetic energy of one of the particles released in a fission reaction is 1.2 × 10–11 J.

The mass of the particle is 1.4×10^{-25} kg.
Calculate the velocity of the particle.

(3)

velocity of the particle = ... m/s

(Total for question = 4 marks)

Q6.

The following descriptions describe waves from different parts of the electromagnetic spectrum.

Complete each description by adding the name of the wave.

Use the name of each wave only once. Each description refers to a different part of the electromagnetic spectrum.

(4)

Description 1

used in cooking

used in short-range communication

typical wavelength 900 nm

name of wave .....

Description 2

used in cooking

used in communication

typical wavelength 150 mm

name of wave .....

Description 3

used in communication

produced by oscillations in electrical circuits

typical wavelength 150 m

name of wave .....

Description 4

used in medical scanning

is emitted by the nucleus of an atom

typical wavelength 2.0×10^{-3} nm

name of wave .....

(Total for question = 4 marks)

Q7.

Figure 4 shows a Geiger-Müller (GM) tube used for measuring radioactivity.

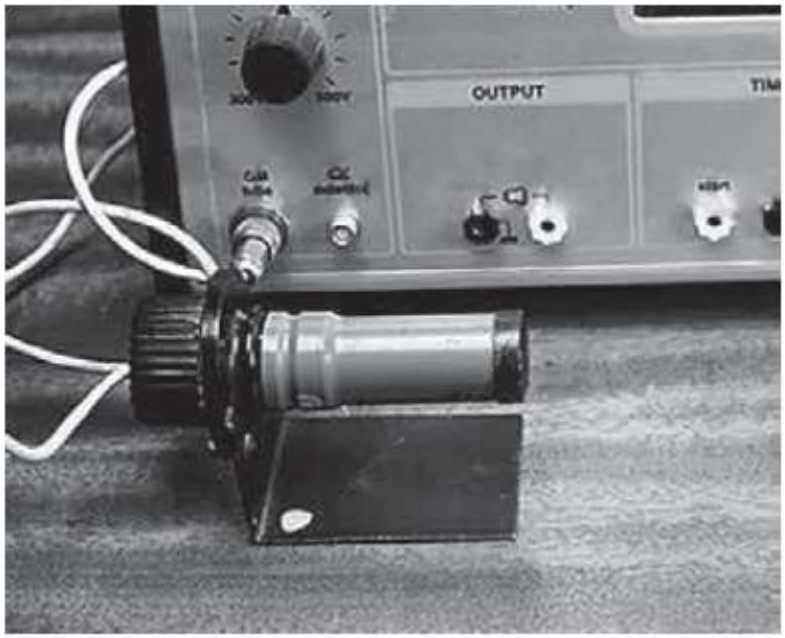

© Andrew Lambert Science Photo Library

Figure 4

Describe how a teacher should use a Geiger-Müller (GM) tube to compare the count-rates from two different radioactive rocks.

(4)

.....

.....

.....

.....

.....

.....

.....

.....

(Total for question = 4 marks)

Q8.

(i) State the name of an instrument that can be used to measure radioactivity.

(1)

.....

(ii) State **two** sources of background radiation.

(2)

1 .....

2 .....

(Total for question = 3 marks)

Q9.

Fusion and fission are nuclear reactions in which large amounts of energy are released.

* Nuclear fission is used in nuclear reactors in some power stations.

In the reactor, a fission chain reaction is maintained and controlled to produce a supply of energy to generate electricity.

Figure 14 is a diagram of a nuclear reactor.

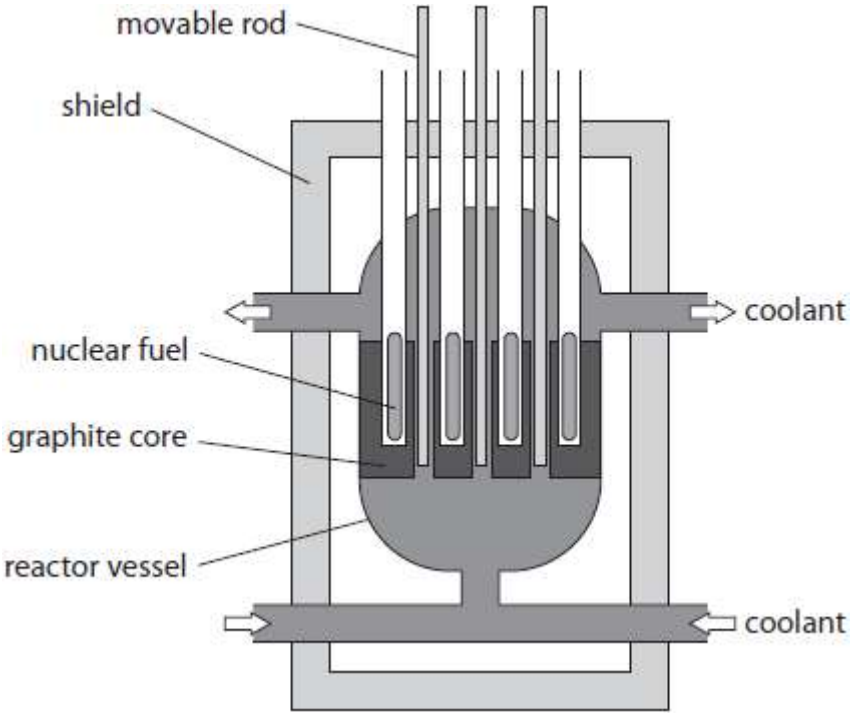

Figure 14

Explain how the graphite core and the movable rods are used to maintain and control the chain reaction.

(6)

.....

.....

.....

.....

.....

.....

.....

.....

.....

.....

.....

.....

.....

.....

.....

.....

.....

(Total for question = 6 marks)

Q10.

Many countries generate electricity using nuclear fission.

(a) The decay products from nuclear fission emit different types of ionising radiation.

Draw **one** line from each type of radiation to its correct description.

(2)

type of radiation	description
alpha	electromagnetic wave
beta	electron
gamma	helium nucleus

(b) There are both fuel rods and control rods inside each fission reactor.

Explain how pushing control rods between the fuel rods changes the rate of nuclear fission in the reactor.

(2)

.....

.....

.....

.....

Mark Scheme

Q1.

Question number	Answer	Mark
	B neutron	(1)

Q2.

Question	Answer	Mark
	A gamma rays **B** X-rays, **C** ultraviolet, **D** microwaves, all applied externally	**1** **AO1.1**

Q3.

Question number	Answer	Mark
	A same atomic number different number of neutrons Options B, C and D have wrong combinations	(1)

Q4.

Question number	Answer	Mark
	☒ C beta plus Options A, B and D are not represented by Figure 9.	(1)

Q5.

Question Number:	Answer	Mark
(i)	☐ C a neutron **The only correct answer is C (neutron causes U-235 fission)** **A** is not correct – incorrect particle **B** is not correct – incorrect particle **D** is not correct – incorrect particle	**(1)**

Question Number	Answer	Additional guidance	Mark
(ii)	recall and substitution (1) $1.2 \times 10^{-11} = ½ \times 1.4 \times 10^{-25} \times v^2$ rearrangement (1) $v^2 = \frac{2 \times 1.2 \times 10^{-11}}{1.4 \times 10^{-25}}$ evaluation (1) (v=) 1.3×10^7 (m/s)	accept rearrangement and substitution in either order ignore POT until evaluation $v^2 = 1.71 \times 10^{14}$ allow numbers that round to 1.3×10^7 (m/s) 1.3 to any other power of ten scores 2 marks award full marks for the correct answer without working	**(3)**

Q6.

Question Number	Answer	Additional guidance	Mark
	in this order infrared (wave) / IR (1) micro(wave) (1) radio (wave) (1) gamma (ray/wave)(1)	accept μ(wave) accept γ not X	(4) AO 1 1

Q7.

Question Number	Answer	Additional guidance	Mark
	a description that combines 4 points from the following: 1. put rock(s) in front of/near tube (1) 2. measure (count rate) separately for the two different rocks (1) 3. measure each count for the same time period (1) 4. keep source-detector distance the same for both rocks (1) 5. take (into account)/ measure background count (1) 6. repeat readings and take average(s) (1)	not "in" tube keep rocks apart	(4) AO 2 2

Q8.

Question Number	Answer	Additional guidance	Mark
(i)	Geiger (Müller counter) (1)	GM (tube/meter) or other appropriate detector e.g. dosimeter, film badge, scintillation counter accept incorrect spellings such as "giga" ignore radioactive counter	**(1)**

Question Number	Answer	Additional guidance	Mark
(ii)	any **two** acceptable sources from		(2)
	cosmic (rays) (1)	cosmic microwave background radiation (CMBR)	
	Sun (1)		
	rocks / ground (1)		
	{nuclear / atomic} tests / nuclear waste (1)	accept nuclear accidents (Chernobyl, Fukushima etc)	
	(nuclear) power stations (1)		
	plant (sources) (1)		
	buildings (1)		
	food (1)	accept named foods	
	water (1)		
	medical (1)	accept X-rays, radiotherapy	
	radon (1)	ignore alpha, beta, gamma	

Q9.

Question Number	Answer	Mark
*	Answers will be credited according to candidate's deployment of knowledge and understanding of the material in relation to the qualities and skills outlined in the generic mark scheme. The indicative content below is not prescriptive and candidates are not required to include all the material which is indicated as relevant. Additional content included in the response must be scientific and relevant. **AO1** • neutrons released in a chain reaction • slow(er) neutrons needed for fission • (some) neutrons are too fast • control rods can be moved in and out • control rods control speed of the reaction **AO2** • graphite core is the moderator • graphite core slows down the neutrons • moveable rods absorb neutrons • moveable rods make more or fewer neutrons available for fission	**(6)** AO 1 1 AO 2 1

Level	Mark	Descriptor
	0	No awardable content
Level 1	1-2	• An explanation that demonstrates elements of physics understanding, some of which is inaccurate. Understanding of scientific ideas lacks detail. (AO1) • The explanation attempts to link and apply knowledge and understanding of scientific ideas, flawed or simplistic connections made between elements in the context of the question. (AO2)
Level 2	3-4	• An explanation that demonstrates physics understanding, which is mostly relevant but may include some inaccuracies. Understanding of scientific ideas is not fully detailed and/or developed. (AO1) • The explanation is mostly supported through linkage and application of knowledge and understanding of scientific ideas, some logical connections made between elements in the context of the question. (AO2)
Level 3	5-6	• An explanation that demonstrates accurate and relevant physics understanding throughout. Understanding of the scientific ideas is detailed and fully developed. (AO1) • The explanation is supported throughout by linkage and application of knowledge and understanding of scientific ideas, logical connections made between elements in the context of the question. (AO2)

Q10.

Question Number	Answer	Acceptable answers	Mark
(a)	Three lines as shown: 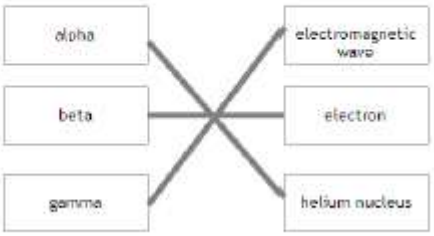 (2)	Any one line correct only scores 1 mark	**(2)**

Question Number	Answer	Acceptable answers	Mark
(b)	An explanation linking Absorb (more) neutrons (1) (to) reduce the number of fission reactions (1)	ignore slow down neutrons slow down (the rate of) the reaction/fission	**(2)**