Name: _____

Investigating springs

core practical

Date:

Time:

Total marks available: 29

Total marks achieved: _____

KSA Physics

Questions

Q1.

Figure 12 shows what happens when weights are added to the end of a wooden strip.

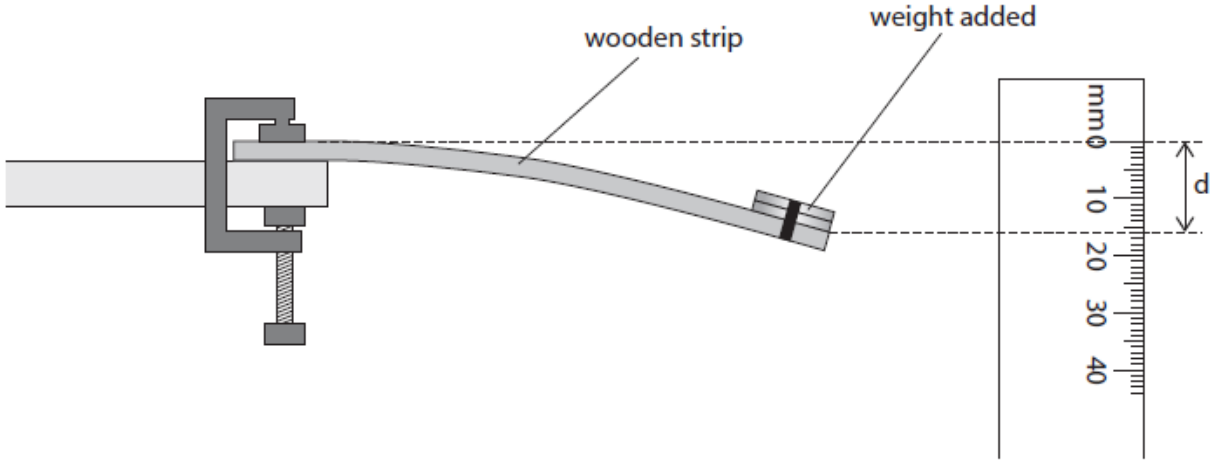

Figure 12

(Source: https://www.schoolphysics.co.uk/age16-19/Mechanics/Simple%20harmonic%20motion/text/Vibrating_cantilever/index.html)

The end of the strip of wood moves down by a distance, d, as shown in Figure 12.

(i) Describe how a student could investigate how the distance, d, depends on the weight added to the wooden strip.

(4)

.....

.....

.....

.....

.....

.....

.....

.....

(ii) A student conducts a second experiment with the same equipment where they decide to keep the size of the weight constant.

State another variable, other than the weights added, that would affect the distance, d.

(1)

.....

.....

(Total for question = 5 marks)

Q2.

Figure 14 shows a spring standing on a table.

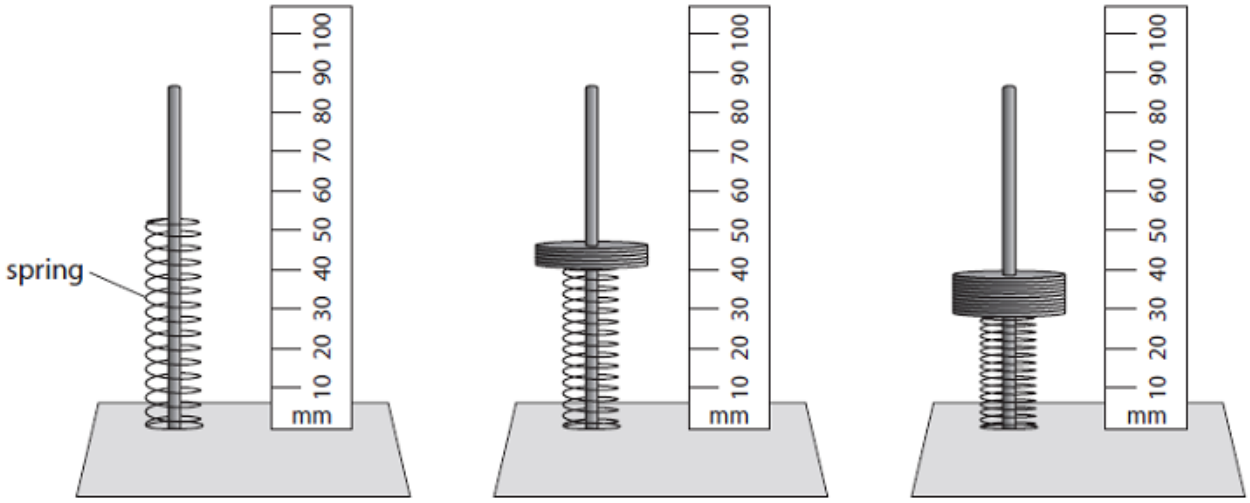

Figure 14a **Figure 14b** **Figure 14c**

Weights are added to the spring as shown in Figures 14b and 14c.

(i) Estimate the original length of the spring as shown in Figure 14a.

(1)

original length = ... mm

(ii) Describe how the reduction in the length of the spring when weights are added can be determined.

(2)

.....

.....

.....

.....

(iii) State **two** ways that the experimental procedure could be improved.

(2)

1 .....

.....

2 .....

.....

(iv) Give **one** reason why the reduction in length eventually reaches a limit as more weights are added.

(1)

.....

.....

(Total for question = 6 marks)

Q3.

A weight of 4.0 N is used to extend a spring.
The extension of the spring is 0.06 m.

(i) Calculate the spring constant, *k*, of the spring.

Use the equation

$$F = k \times x$$

(3)

spring constant = ... N/m

(ii) State what measurements should be made to determine the extension of the spring produced by the 4.0 N weight.

(2)

.....

.....

.....

.....

(Total for question = 5 marks)

Q4.

A student investigates the stretching of a long piece of rubber.

Figure 15 shows the apparatus to be used.

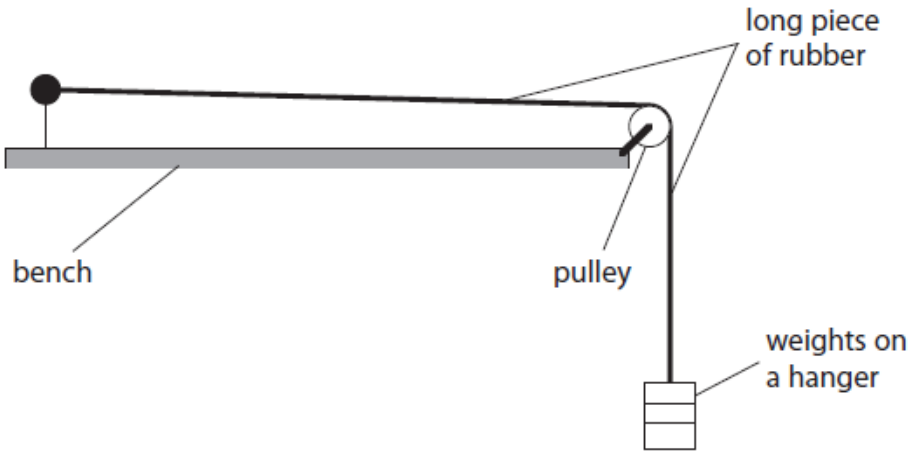

Figure 15

The student puts just enough weight on the weight hanger to make the piece of rubber just tight.

The student wants to plot a graph to show how the extension of the piece of rubber varies with the force used to stretch it.

The student adds a known weight to the weight hanger.

(i) Describe how the student could measure the extension of the rubber when

he adds another weight to the weight hanger.

(2)

.....

.....

.....

.....

(ii) The student obtains a series of values of force and extension while loading the

piece of rubber and then unloading it.

Figure 16 shows the graph of the student's values.

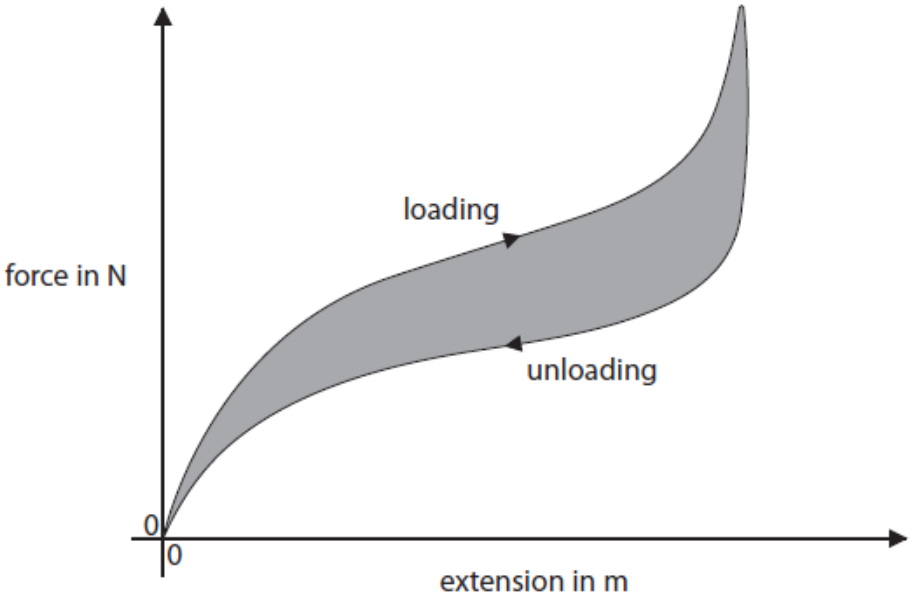

Figure 16

Explain how the shape of this graph shows that the distortion of the piece of rubber being stretched is different from the distortion of a spring being stretched.

(2)

.....

.....

.....

.....

(Total for question = 4 marks)

Q5.

The student measures the extension of the spring as he adds different loads (loading).

He then measures the extension of the spring as he takes the loads off (unloading).

He then repeats the investigation using a rubber band instead of the spring.

The tables in Figure 4 show his results.

spring		
load in N	extension in mm	extension in mm
	loading	unloading
0	0	0
1	20	20
2	40	40
3	60	60

rubber band		
load in N	extension in mm	extension in mm
	loading	unloading
0	0	0
1	14	25
2	33	42
3	60	60

Figure 4

State **two** similarities and **two** differences between the results for the spring and the results for the rubber band.

(4)

Similarity 1

.....

.....

Similarity 2

.....

.....

Difference 1

.....

.....

Difference 2

.....

.....

(Total for question = 4 marks)

Q6.

A student uses the apparatus shown in Figure 3 to investigate the extension of a spring.

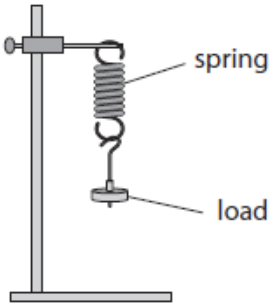

Figure 3

(i) Describe how the student could measure the extension of the spring when a load is added.

(3)

.....

.....

.....

.....

.....

.....

(ii) The extension of the spring for a load of 1.5 N is 30 mm.

Calculate the spring constant for the spring.

Use the equation

$$\text{spring constant} = \frac{\text{load}}{\text{extension}}$$

(2)

spring constant = ... N/mm

(Total for question = 5 marks)

Mark Scheme

Q1.

Question Number	Answer	Additional guidance	Mark
(i)	a description including any **four** of the following: measure **initial** d / distance / height (1) change weight (1) measure **new** d / distance / height (1) repeat / continue (changing weight and measuring d) (1) plot a graph (d against weight) (1)	accept reference to 16 (mm)	**(4)** **AO3a** **AO 3.2a/2b**

Question Number	Answer	Additional guidance	Mark
(ii)	any **one** from: distance between the clamp and the masses (1) (change) strip (1)	accept ruler for strip throughout accept length of the strip accept thicker strip /thinner strip / material of strip / strip of different density etc.	**(1)** **AO3.3b**

Q2.

Question number	Answer	Additional guidance	Mark
(i)	50.0 to 55.0 (mm) inclusive		**(1)**

Question number	Answer	Additional guidance	Mark
(ii)	a description including note the original length (1) note the final length and subtract (1)		**(2)**

Question number	Answer	Additional guidance	Mark
(iii)	any two from: use a ruler with a smaller/millimetre divisions (1) use interim values of weight (1) add more weights (to increase the range) (1) move the ruler closer to the spring (1) use of pointer (1) repeat **and** average (1)	 ignore more accurate add fixed values of weights eye level / no parallax	**(2)**

Question number	Answer	Additional guidance	Mark
(iv)	the coils are {pushed together /touching} (1) or spring is fully compressed /cannot be made shorter (1)		**(1)**

Q3.

Question Number	Answer	Additional guidance	Mark
(i)	substitution (1) 4.0=k x 0.06 rearrangement (1) $\frac{4.0}{0.06}$ (=k) evaluation (1) 67 (N/m)	allow substitution and rearrangement in either order (k=) $\frac{F}{x}$ allow values that round to 67 (N/m) award full marks for the correct answer without working POT error 2 marks maximum	**(3)**

Question Number	Answer	Additional guidance	Mark
(ii)	(measurement of) original length (1) (measurement of) final length (1)	Accept measure length of spring for 1 mark	**(2)**

Q4.

Question Number	Answer	Additional guidance	Mark
(i)	A description including any one from the following (1) **measure** a length or a specific distance related to the rubber or weights on a hanger OR with a **named device** (e.g. metre rule / stick / ruler / measuring tape) OR note position of a fixed point on rubber / weight carrier **AND** extension calculated / measured as the change in or difference between two positions or lengths or extensions (1)	evidence may be taken from additions to the diagram ignore vague statements such as see how it much it extends	(2)

Question Number	Answer	Additional guidance	Mark
(ii)	An explanation linking graph of rubber band is non-linear / curved / not directly proportional (1) graph for unloading does not go through same points as loading (1)	 (graph for) spring would be straight (graph for) spring would only have one line / go through the same points ignore reference to returning to original shape / length	(2)

Q5.

Question number	Answer	Additional guidance	Mark
	two similarities such as: (2) • both use the same loads • both start/end with same extension • both return to original length **two differences such as:** (2) • extensions for spring and rubber band differ • spring - loading and unloading are the same – rubber band different • extension- spring linear, rubber band non-linear	go up evenly/even steps steps uneven	**(4)**

Q6.

Question number	Answer	Additional guidance	Mark
(i)	An answer that combines the following to provide a logical description of the method • measure unstretched length of spring (1) • measure stretched length of spring (1) • subtract (1)	set unstretched position at 0 read stretched position use a ruler	**(3)**

Question number	Answer	Additional guidance	Mark
(ii)	substitution (1) $\frac{1.5}{30}$ evaluation (1) 0.05 (N/mm)	award full marks for correct answer without working 50 N/m allow power of 10 (POT) error for 1 mark	**(2)**