Questions

Q1.

The International Space Station (ISS) has several solar panels called wings.

(a) The wings convert energy from the Sun into a form useful in the ISS.

(1)

- ☐ **A** transverse and electromagnetic
- ☐ **B** electromagnetic but not transverse
- ☐ **C** transverse but not electromagnetic
- ☐ **D** neither transverse nor electromagnetic

(b) In one second, the useful energy available from one wing is 34.3 kJ.
The energy incident on the wing from the Sun is five times this amount.

What is the percentage efficiency of the wing?

(3)

efficiency = ... %

(c) A wing is in direct sunlight.
The ISS is not receiving energy from the wing.
The temperature of the wing remains constant.

Explain why the temperature of the wing remains constant in these conditions.

(2)

.....

.....

.....

.....

Q2.

Figure 14 shows a demolition ball of mass 400 kg.

The ball is used to demolish a wall.

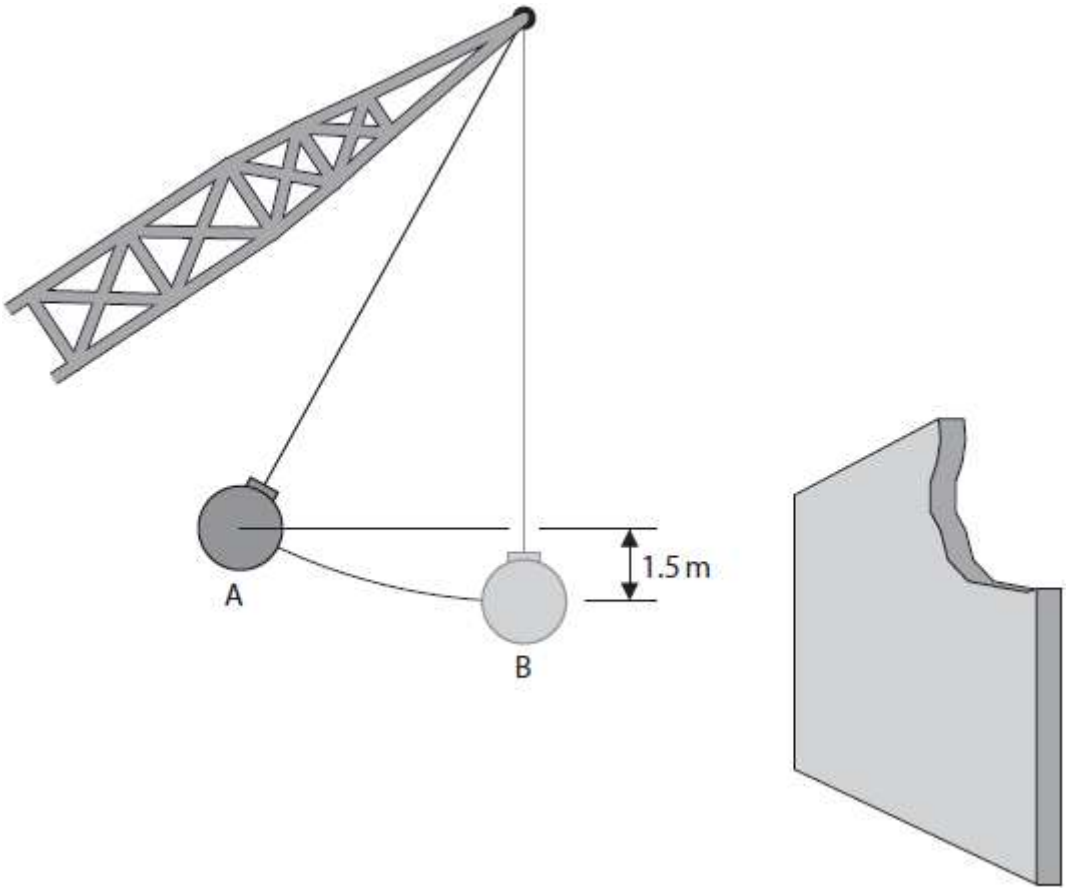

Figure 14

* After knocking down the wall, the ball will swing **freely**.

The graph in Figure 15 shows how the height of the ball above ground varies with time during three swings.

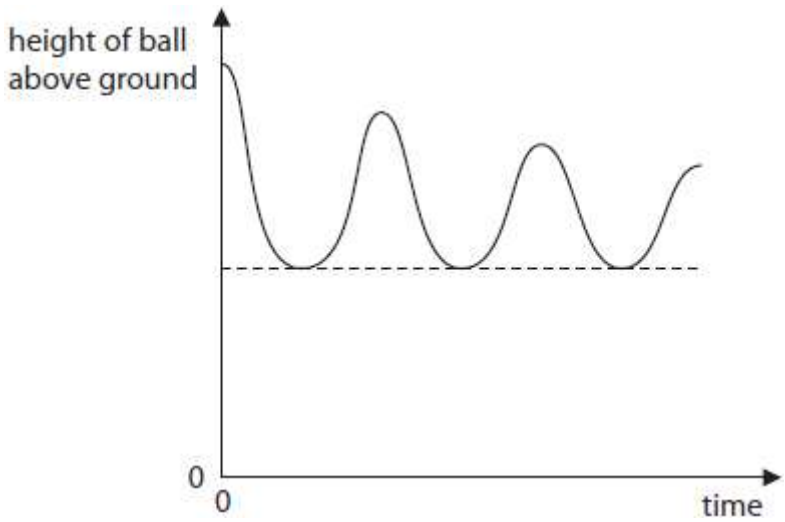

Figure 15

Explain how the energy within the system changes during this time.

The system consists of the swinging ball and its surroundings.

(6)

.....

.....

.....

.....

.....

.....

.....

.....

.....

.....

.....

.....

(Total for question = 6 marks)

Q3.

A student places a trolley at the top of a runway, as shown in Figure 3.

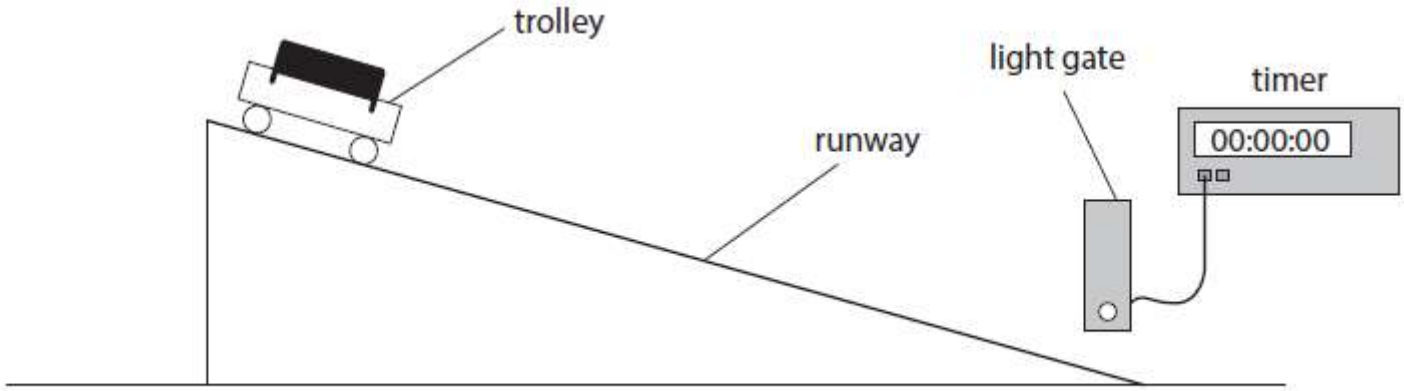

Figure 3

The student had to lift the trolley through a height of 26 cm to put it at the top of the runway.

The gravitational potential energy, Δ*GPE*, of the trolley increases by 4.1 J when lifted to the top of the

runway.

The gravitational field strength, g, = 10 N/kg.

(i) Show that the mass of the trolley is about 1.6 kg.

Use the equation

$$m = \frac{\Delta GPE}{g \times \Delta h}$$

(2)

(ii) The student releases the trolley and the trolley moves down the runway.

The student assumes that all the extra gravitational potential energy, ΔGPE, stored at the top of the runway is transferred to kinetic energy at the end of the runway.
Calculate the expected value of the velocity of the trolley at the end of the runway.
Use the equation

$$v^2 = \frac{2 \times \Delta GPE}{m}$$

(3)

expected velocity = ... m/s

(iii) The light gate, shown in Figure 3, is used to determine the actual velocity of the trolley at the end of the runway.

The actual velocity at the end of the runway is less than the expected velocity as calculated in (ii).
Suggest **one** way to reduce the difference between the actual velocity and the expected velocity.

(1)

.....

.....

(Total for question = 6 marks)

Q4.

(i) Figure 14 shows the vertical forces on an aeroplane.

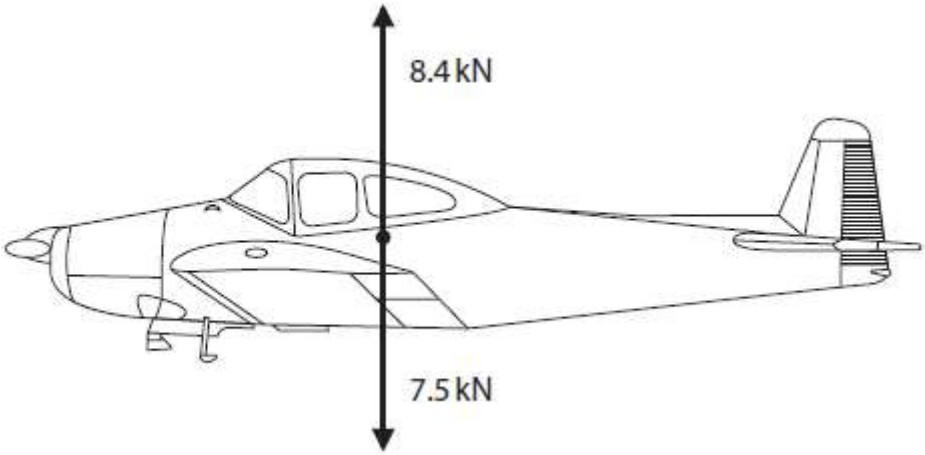

Figure 14

Use information from the diagram to determine the size and direction of the resultant vertical force on the aeroplane.

(2)

size = ... kN, direction is .....

(ii) The aeroplane is descending.

Figure 15 shows a diagram of the resultant vertical and horizontal forces on the aeroplane as it is descending.

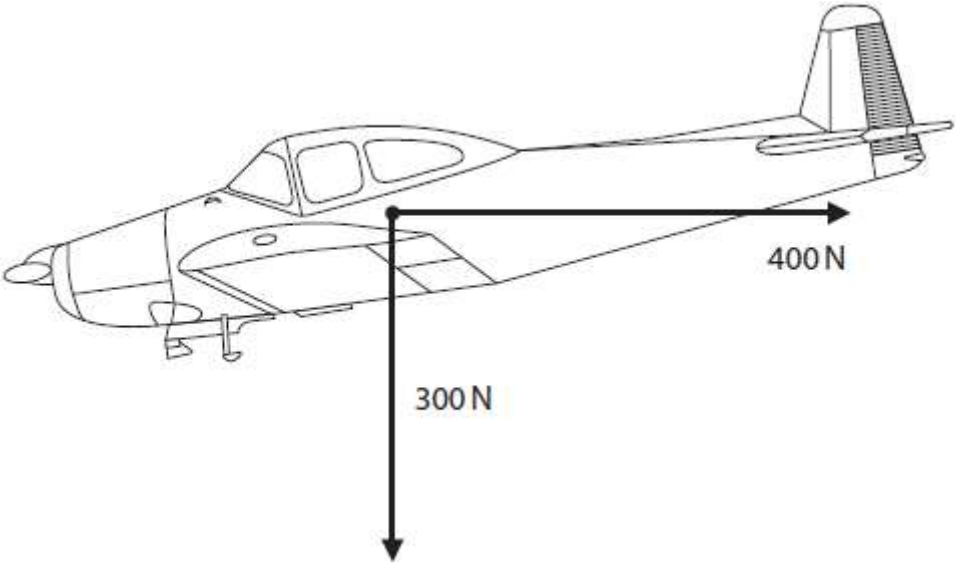

Figure 15

Complete the diagram to show the resultant of these two forces.

(1)

(iii) The mass of the aeroplane is 750 kg.

Calculate the change in gravitational potential energy of the aeroplane as it descends from 1300 m to the ground.
Gravitational field strength (g) = 10 N/kg

(2)

energy = ... J

(Total for question = 5 marks)

Q5.

Answer the question with a cross in the box you think is correct ☒ . If you change your mind about an answer, put a line through the box ☒ and then mark your new answer with a cross ☒ .

Two cyclists ride on a hilly road and go through points P, Q, R and S.

The diagram in Figure 16 shows how the vertical height of the road changes during the journey from P to S.

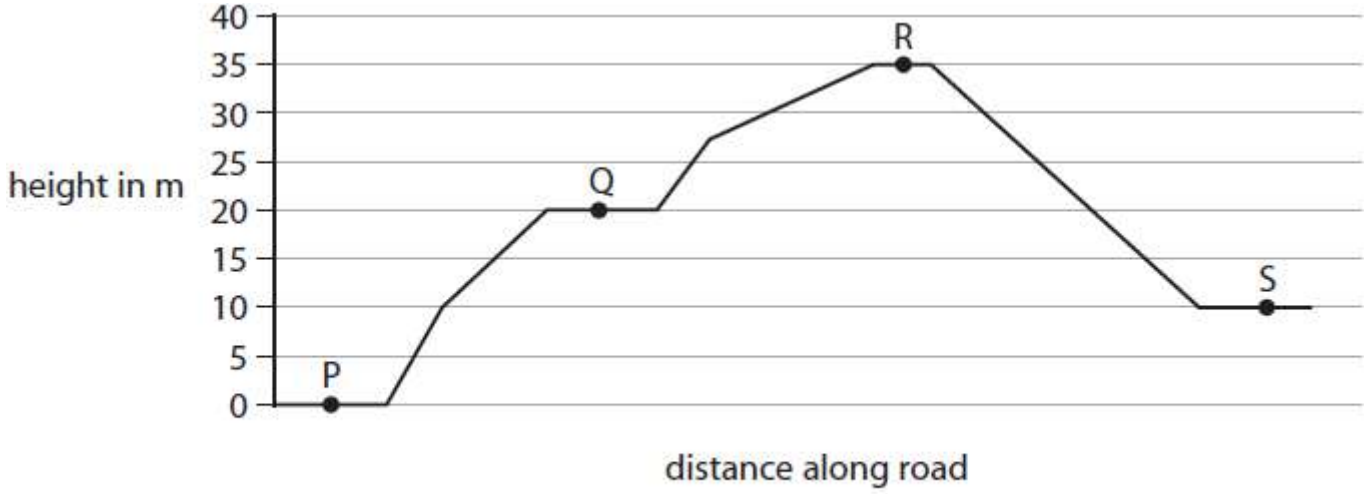

Figure 16

(i) The greatest overall change in gravitational potential energy for each cyclist is between which two points on the journey?

(1)

☐ **A** P and Q
☐ **B** Q and R
☐ **C** P and S
☐ **D** R and S

(ii) The total weight of one cyclist and bicycle is 700 N.

Calculate the total amount of work done against gravity when the cyclist travels from point P to point Q

in the journey.

(2)

work done = ... J

(iii) The gravitational potential energy of the other cyclist changes by 11 250 J when travelling from point Q to point R.

Calculate the mass of this cyclist.
Gravitational field strength = 10 N / kg
Use the equation

$$\Delta GPE = m \times g \times \Delta h$$

(2)

mass = ... kg

(iv) Explain why the total amount of work done by a cyclist between points Q and R is different from the change in gravitational potential energy of the cyclist between points Q and R.

(2)

.....

.....

.....

.....

(v) The cyclists lubricated the chains and the wheel bearings of their bicycles before setting off.

Lubricating the chains and wheel bearings helps to

(1)

☐ **A** decrease the amount of work done against gravity
☐ **B** decrease the efficiency of the cyclist and bicycle
☐ **C** increase the efficiency of the cyclist and bicycle
☐ **D** increase the overall amount of energy transferred by the cyclist

(Total for question = 8 marks)

Q6.

Answer the question with a cross in the box you think is correct ☒. If you change your mind about an answer, put a line through the box ☒ and then mark your new answer with a cross ☒.

Which of these is the equation for work done?

(1)

- ☐ **A** work done = force ÷ distance moved in direction of force
- ☐ **B** work done = force × distance moved in direction of force
- ☐ **C** work done = force ÷ distance moved at right angles to direction of force
- ☐ **D** work done = force × distance moved at right angles to direction of force

(Total for question = 1 mark)

Q7.

Figure 14 shows the vertical forces on an aeroplane.

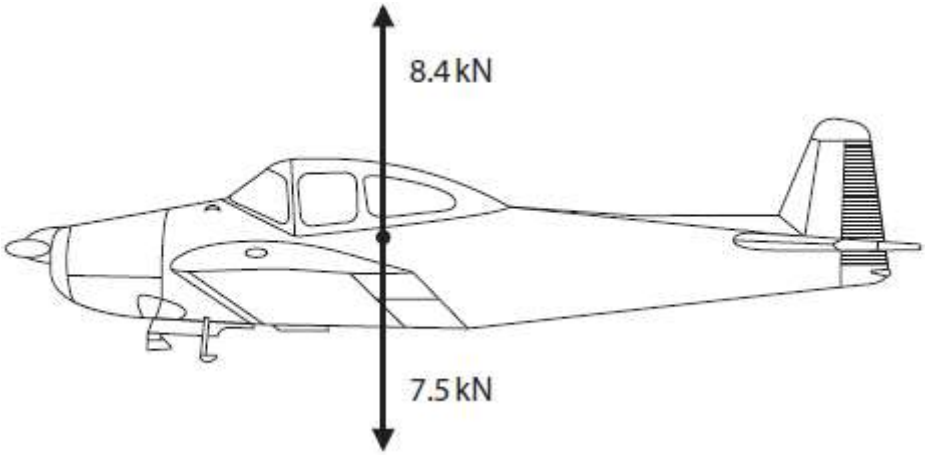

Figure 14

The aeroplane is powered by an engine that burns fuel.

The fuel supplies a total of 6500 kJ of energy every minute.

The efficiency of the engine is 0.70 (70%).

(i) Calculate the power output of the engine.
Give your answer in kW.

(4)

power = ... kW

(ii) Explain why the efficiency of the engine is less than 1 (100%).

(2)

.....

.....

.....

.....

(Total for question = 6 marks)

Q8.

Some students investigate a model of the craters produced by meteorite impacts.

They drop balls into a tray filled with sand.

They use six balls with different masses.

They drop each ball from the same height.

(a) (i) Which one of these graphs shows the relationship between the gravitational potential energy (gpe) of the balls and their mass when they are all at the same height?

Put a cross (☒) in the box next to your answer.

(1)

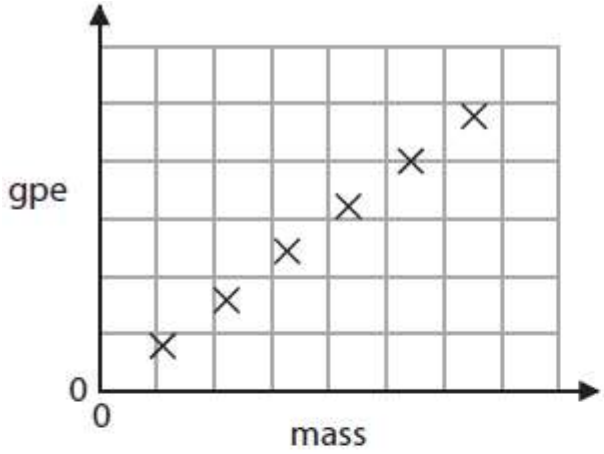

☐ **A**

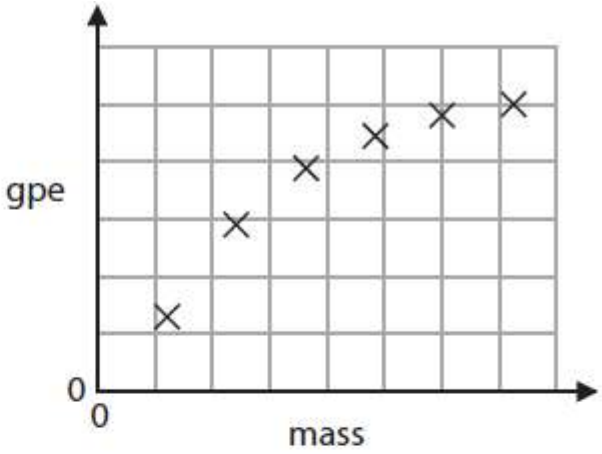

☐ **B**

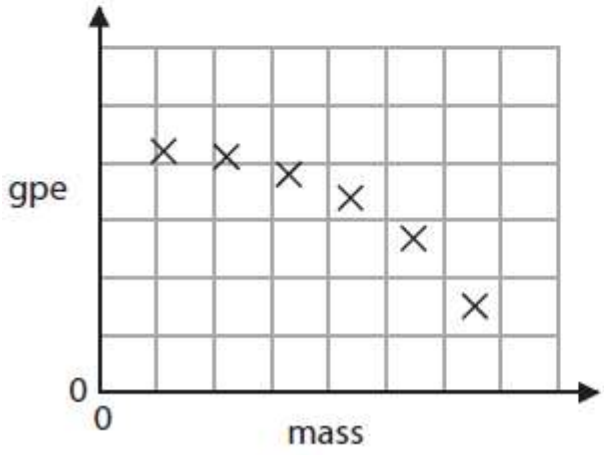

☐ **C**

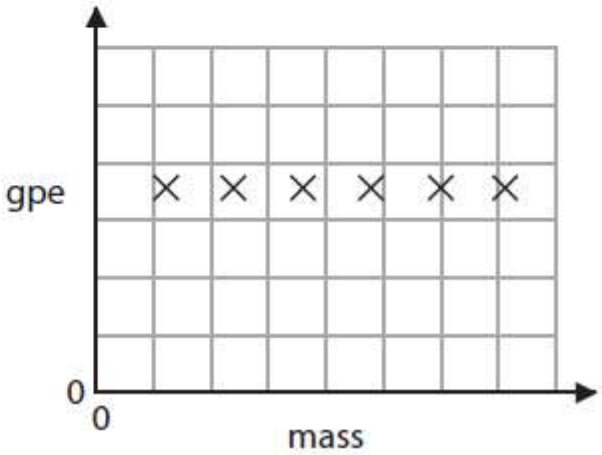

☐ **D**

(ii) Describe how the energy of a ball changes as it drops towards the sand.

(2)

.....

.....

.....

.....

(b) This photograph shows the sand after several balls have hit it.

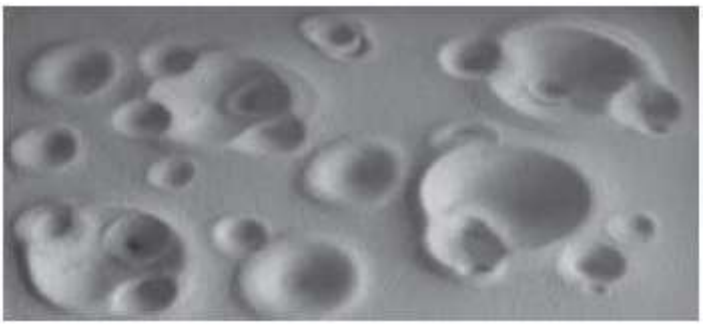

The students read this information in a textbook:

'When work is done, energy is transferred.'

Explain how work is done when the balls impact on the sand.

(2)

.....

.....

.....

.....

(c) When one ball hits the sand, it has a velocity of 6.2 m/s.

It has a momentum of 0.46 kg m/s.

(i) Calculate the mass of the ball.

(3)

mass of ball = ... kg

(ii) The ball takes 0.17 s to come to rest after it hits the sand.
Calculate the average impact force.

(2)

average impact force = ... N

Q9.

The rover uses solar panels for its power needs.

The solar panels can provide 1200 W of power.

(i) Show that the solar panels can provide 2.16 MJ of energy in 30 minutes.

(1)

(ii) The solar panels convert 27% of the energy they receive from the Sun into electricity.

Calculate the solar energy received by the panels that provides the 2.16 MJ of energy.

(2)

energy received = ... J

(Total for question = 3 marks)

Q10.

Figure 18 shows an electric motor lifting a set of masses.

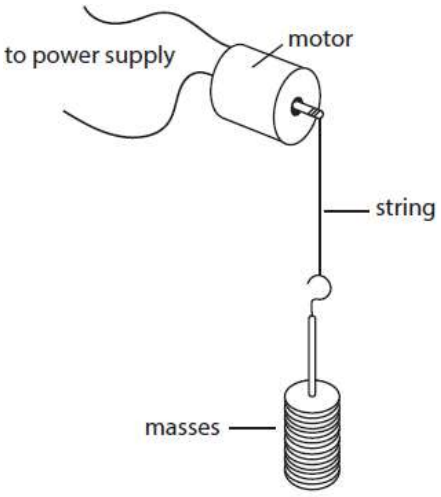

Figure 18

(i) Describe an experiment, using the apparatus in Figure 18, to determine the gravitational potential energy gained by the masses as they are lifted.

Your description should include any measuring devices to be used.
You may add to the diagram in Figure 18 if it helps your answer.

(4)

.....

.....

.....

.....

.....

.....

.....

.....

(ii) In one experiment, the change in gravitational potential energy of the masses was 5.8 J.

The total mass lifted was 320 g.
Calculate the vertical height the masses travelled through.
Use g = 10 N/kg.

(2)

height = ... m

(iii) The efficiency of the motor was 59%.

State **one** reason why the motor was not 100% efficient.

(1)

.....

.....

(Total for question = 7 marks)

Q11.

The area between the curve and the extension axis of a force/extension graph corresponds to work done or energy transferred.

Suggest what the shaded area of the graph in Figure 16 represents.

(2)

.....

.....

.....

.....

(Total for question = 2 marks)

Mark Scheme

Q1.

Question Number	Answer	Acceptable answers	Mark
(a)	A transverse and electromagnetic		**(1)**

Question Number	Answer	Acceptable answers	Mark
(b)	Evaluation 171.5 (1) Substitution (34.3/171.5) x 100 (1) Evaluation 20 (%) (1)	award full marks for correct answer with no working 34.3 x 5 [34.3 /(34.3 x 5)] x 100 [34.3 /(34.3 x 5)] [34.3 /171.5] Allow 0.2 or 1/5 for 3 marks	**(3)**

Question Number	Answer	Acceptable answers	Mark
(c)	rate of {energy/heat} (from the Sun){absorbed/taken in} (1) equals rate of {energy/heat} {radiated/emitted/given out}(1)	Allow 'energy in = energy out' for 1 mark 'power in = power out' for 2 marks	**(2)**

Q2.

Question number	Indicative content	Mark
	Answers will be credited according to the candidate's deployment of knowledge and understanding of the material in relation to the qualities and skills outlined in the generic mark scheme. The indicative content below is not prescriptive and candidates are not required to include all of the material which is indicated as relevant. Additional content included in the response must be scientific and relevant. **A03 (6 marks)** • the varying height shows a varying gravitational potential energy(gpe) during the swings • when the height is a maximum the gpe is a maximum-at top of swing • when the height is a minimum the gpe is a minimum-at bottom of swing • kinetic energy varies during swing • kinetic energy maximum at bottom of swing • kinetic energy minimum at top of swing • (continuous) interchange of KE and gpe • total amount of energy is constant during one swing • over a number of swings max KE and max PE decreases • energy is dissipated/'lost' to surroundings • because of air resistance / friction • amplitude/size of swings decrease (as energy 'lost' to surroundings) ignore references to momentum	**(6)**

Level	Mark	Descriptor
	0	• No rewardable material.
Level 1	1-2	• Deconstructs scientific information but understanding and connections are flawed. An unbalanced or incomplete argument that provides limited synthesis of understanding. • Judgements are supported by limited evidence. (AO3)
Level 2	3-4	• Deconstructs scientific information and provides some logical connections between scientific concepts. An imbalanced argument that synthesises mostly relevant understanding, but not entirely coherently. • Judgements are supported by evidence occasionally. (AO3)
Level 3	5-6	• Deconstructs scientific information and provide logical connections between scientific concepts throughout. A balanced, well-developed argument that synthesises relevant understanding coherently. • Judgements are supported by evidence throughout. (AO3)

Q3.

Question Number	Answer	Additional guidance	Mark
(i)	substitution with conversion (2) (m =) $\frac{4.1}{10 \times 0.26}$ (=1.58)	accept 9.8(1) instead of 10 for g throughout alternative method substitution and rearrangement with conversion (2) e.g. Δgpe = 10 x 0.26 x 1.6 (=4.1) Allow for 1 mark: (m =) $\frac{4.1}{10 \times 26}$ allow 26 to any power of 10 for this mark OR Δgpe = 10 x 26 x 1.6 allow 26 to any power of 10 for this mark OR height converted to m 0.26 (m) or 26 x 10^{-2} (m)	**(2)** **AO 2.1**

Question Number	Answer	Additional guidance	Mark
(ii)	substitution (1) $(v^2=)\ \frac{2 \times 4.1}{1.6}$ evaluation of v^2 (1) 5.1(25) evaluation of v (1) 2.3 (m/s)	ecf from part a(i) throughout accept use of 1.58 accept 5.2 (use of 1.58) accept values that round to 2.3 e.g. 2.264 award full marks for the correct answer without working	**(3)** **AO2.1**

Question Number	Answer	Additional guidance	Mark
(iii)	addition of any lubricant / oil / grease	make runway steep(er) use an air track instead streamline trolley	**(1)** **AO 3.3b**

Q4.

Question Number:	Answer	Additional guidance	Mark
(i)	0.9 (k N) (1) up / upwards / ascending (1)	accept .9 or 0.90 north N ↑	**(2)** AO 3 2a AO 3 2b

Question Number:	Answer	Additional guidance	Mark
(ii)	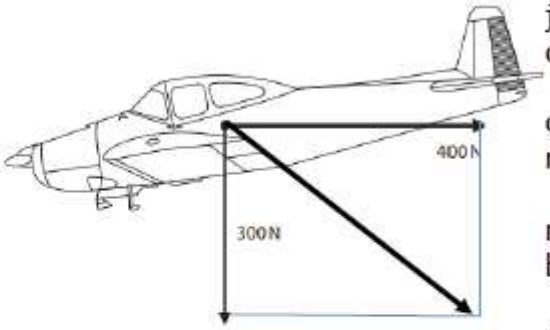	judge length and direction by eye construction lines need not be shown magnitude need not be stated allow missing arrowhead if direction and length are correct reject answers which have any additional vectors drawn	(1) AO 3 2b

Question Number:	Answer	Additional Guidance	Mark
(iii)	recall and substitution (1) GPE = 750 x 10 x 1300 evaluation (1) (energy =) 9 800 000 (J)	 no POT error (could have missed out g) allow answers in standard form 9.8×10^6 allow answers that round to 9 800 000 e.g. 9 750 000 J allow 9800 kJ or 9.8MJ allow 9 555 000 J allow negative values award full marks for correct answer without working	(2) AO 2 1

Q5.

Question number	Answer	Additional guidance	Mark
(i)	D R and S A, B and C are incorrect because the difference in vertical positions are all less than that shown by R and S		(1) AO1

Question number	Answer	Additional guidance	Mark
(ii)	recall (1) work done = force x distance substitution and evaluation (1) (work done =) 14,000 (J)	(work done) = 700 x 20 award full marks for the correct answer without working	(2) AO1

Question number	Answer	Additional guidance	Mark
(iii)	substitution (1) 11250 = m x 10 x 15 rearrangement and evaluation (1) (mass=) 75 (kg)	award full marks for the correct answer without working. if no other marks scored then award 1 mark for answers of 0.013 (substitution mark using h = 15)	(2) AO2

Question number	Answer	Additional guidance	Mark
(iv)	An explanation linking some work is done to overcome friction/air resistance (1) energy is dissipated /transferred to the environment (1)	 allow energy is lost thermal energy	(2) AO1

Question number	Answer	Additional guidance	Mark
(v)	C increase the efficiency of the cyclist and bicycle A is incorrect because lubrication has no effect on work done against gravity B is incorrect because lubrication will increase efficiency D is incorrect because the overall energy transfer will not increase		(1) AO1

Q6.

Question Number	Answer	Mark
	The only correct answer is B: work done= force x distance moved in direction of force **A is incorrect** because the equation would be dimensionally inconsistent **C is incorrect** because the equation would be dimensionally inconsistent **D is incorrect** because the direction of the distance moved is incorrect	(1)

Q7.

Question Number:	Answer	Additional Guidance	Mark
(i)	recall efficiency equation (1) $\text{efficiency} = \frac{\text{useful output}}{\text{input}}$ rearrangement (1) output energy = 0.70 x 6500 recall power equation (1) $\text{power} = \frac{\text{energy}}{\text{time}}$ evaluation (1) (power =) 76 (kW)	$\text{efficiency} = \frac{\text{power output}}{\text{power input}}$ 4550 (kJ) seen scores 2 marks (from 0.7 x 6500 (kJ)) $\frac{4550}{60}$ accept ecf from output energy accept values that round up to 76 (kW) e.g. 75.8 award full marks for correct answer without working	**(4)** AO 1 1 AO 2 1

Question Number:	Answer	Additional Guidance	Mark
(ii)	an explanation linking: (useful) output energy is less than input energy (1) some energy is transferred to less useful forms (1)	 input energy is greater than output energy (only) 70% of the input energy is useful energy is dissipated / wasted / lost (to surroundings) energy is lost / transferred as thermal / heat 30% is lost /dissipated / wasted / lost for 2 marks	**(2)** AO 1 1

Q8.

Question Number	Answer	Acceptable answers	Mark
(a)(i)	**A**		**(1)**

Question Number	Answer	Acceptable answers	Mark
(a)(ii)	A description to include any two of • Gravitational / potential energy reduces (1) • kinetic energy increases (1) • total energy remains constant (1)	Ignore energy changes resulting from impact with sand GPE reduces KE increases Allow GPE is transferred to KE for 2 mark	**(2)**

Question Number	Answer	Acceptable answers	Mark
(b)	A explanation linking • (work is done) displacing the sand (1) with EITHER • (as) <u>kinetic</u> energy of the ball(s) has been transferred (1) OR • by the force between the ball and the sand (1)	sand moving/ pushing/ blowing upwards OWTTE or ball sinking into sand	**(2)**

Question Number	Answer	Acceptable answers	Mark
(c) (i)	transposition mass = momentum / velocity (1) substitution mass = 0.46 / 6.2 (1) evaluation 0.074 (kg) / 74g (1)	Subst. and transform. either order 1 mark only can be scored for correct substitution after incorrect transposition. Give full marks for correct answer with no working. Answers that round to 0.074 (kg) 0.07 (kg)	**(3)**

Question Number	Answer	Acceptable answers	Mark
(c)(ii)	substitution (impact) force = 0.46 / 0.17 (1) evaluation 2.7 (N) (1)	Give full marks for correct answer with no working. Ignore power of ten error until evaluation Answers which round to 2.7 Allow ECF if candidate has used mass from part (i) in F=m(v-u) / T $F = \frac{6.2 - 0}{0.17} \times 0.074$ (1) = 2.7 (N) (1)	**(2)**

Q9.

Question number	Answer	Additional guidance	Mark
(i)	select and substitute (1) (E = P x t) = 1200 x 30 x 60 (in J)	all three numbers needed to **show that** allow 1800 (seconds) for 30x60 ignore evaluation	**(1)** **AO1.1**

Question number	Answer	Additional guidance	Mark
(ii)	select, rearrange and substitute (1) (input energy supplied = $\frac{\text{energy provided by panel}}{\text{efficiency}}$) $= \frac{2.16\ (\text{MJ})}{(0.)27}$ evaluation (1) $8(.0) \times 10^6$ (J)	$\frac{2\ 160\ 000}{(0.)27}$ 8 000 000 (J) 8(.0) MJ award full marks for the correct answer without working $8(.0) \times 10^4$ (J) gains 1 mark (uses 27% incorrectly)	(2) AO2.1

Q10.

Question number	Answer	Additional guidance	Mark
i	a description to include **two** clear statements of what is measured plus further details use scales / a balance to measure mass(es) (1) use a (metre) rule to measure a distance / height (1) PLUS any **two** from set balance to zero / tare (before placing masses) (1) measure initial and final heights (1)	marks may be scored from the diagram allow counts up the total mass on the hanger allow use newton meter / scale / balance to measure weight allow ruler / measuring tape ignore metre stick	**(4)** **AO1.2**

	use of same reference point for height measurements (1) clamp vertical rule / detail of checking rule is vertical (1) selects GPE = m g (Δ)h (1)	e.g. top of masses (GPE =) work done = weight x distance	

Question number	Answer	Additional guidance	Mark
ii	rearrangement and substitution (1) $\frac{5.8}{320 (\times 10^{-3}) \times 10}$ evaluation (1) 1.8 (m)	$\frac{5.8}{0.320 \times 10}$ any number rounding to 1.8 e.g. 1.8125 award full marks for the correct answer without working	**(2)** **AO2.1**

Question number	Answer	Additional guidance	Mark
iii	award **one** mark for any stated reason from: friction (in the motor) (1) heating (electrical or from frictional effects) (1)	other valid answers possible allow 'it needs oiling' etc. to thermal (energy store) / energy transferred to surroundings / energy dissipated allow it gets hot ignore sound	**(1)** **AO1.1**

Q11.

Question Number	Answer	Additional guidance	Mark
	An answer that includes **difference** in energy transferred / work done (when loading and unloading) (1) transferred to thermal energy (store in the rubber) (1)	(thermal) energy is dissipated to the surroundings	**(2)**