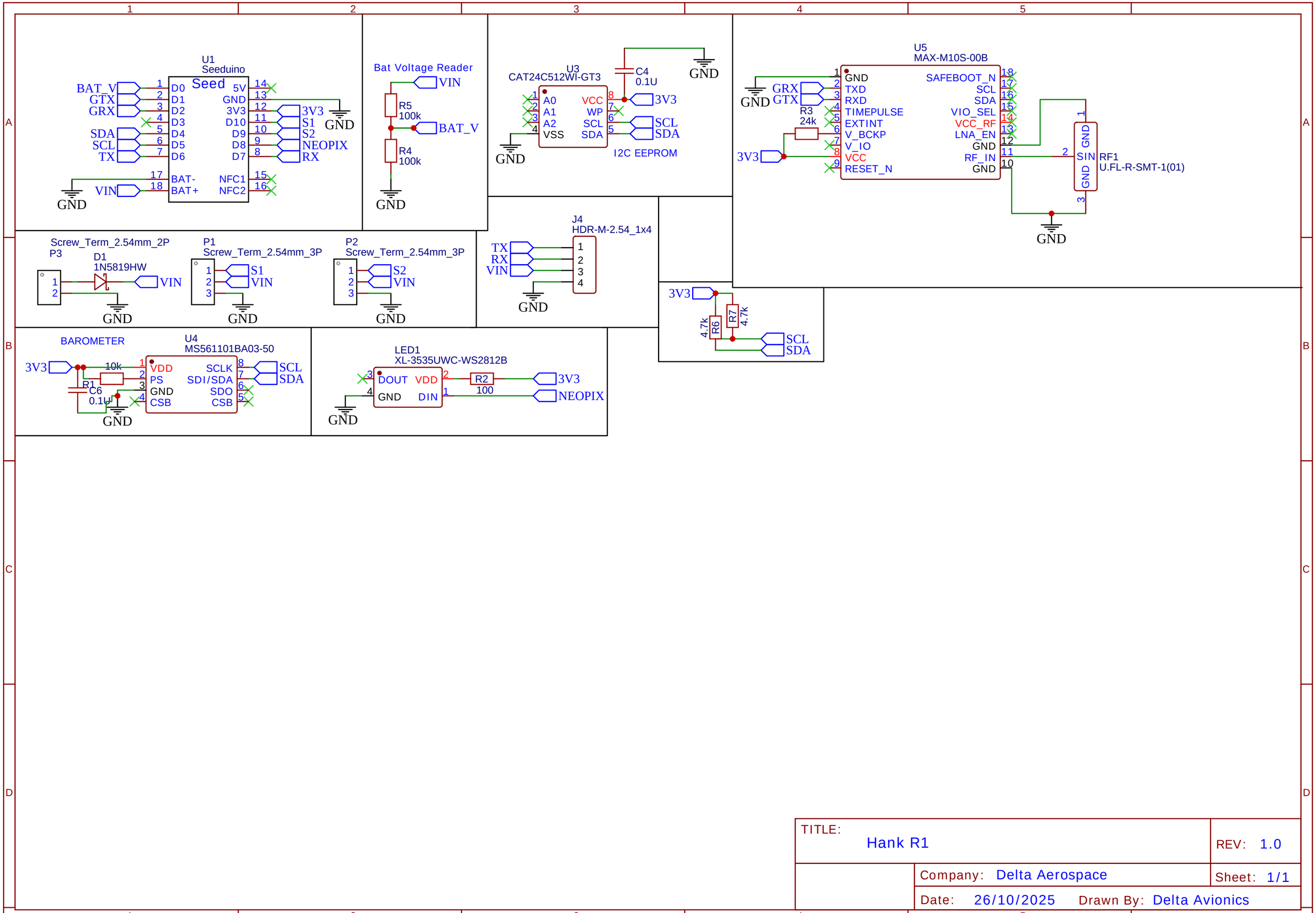

TITLE: Hank R1		REV: 1.0
	Company: Delta Aerospace	Sheet: 1/1
	Date: 26/10/2025 Drawn By: Delta Avionics	