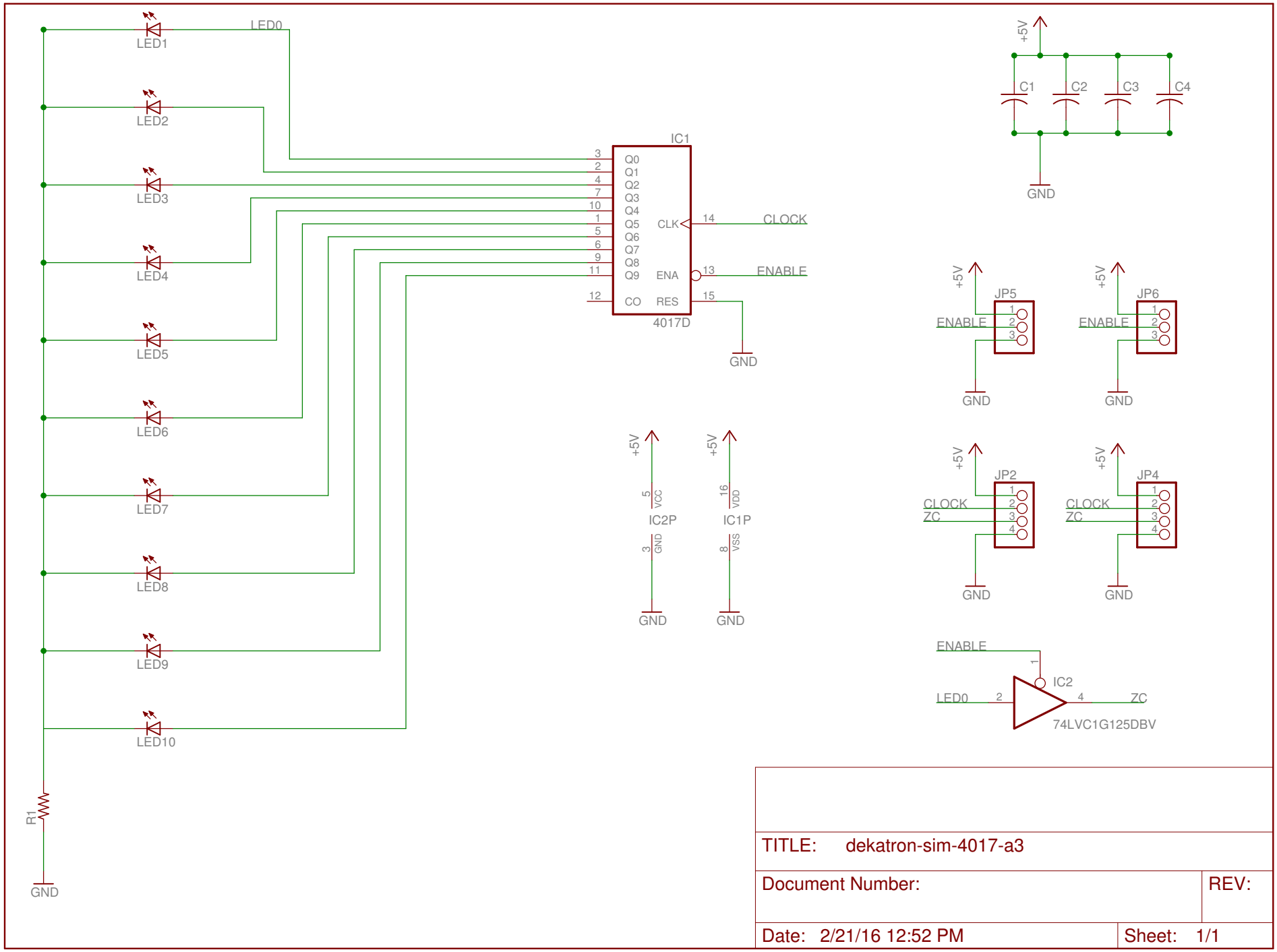

TITLE: dekatron-sim-4017-a3

Document Number:

REV:

Date: 2/21/16 12:52 PM

Sheet: 1/1