SIMULATED DEKATRON

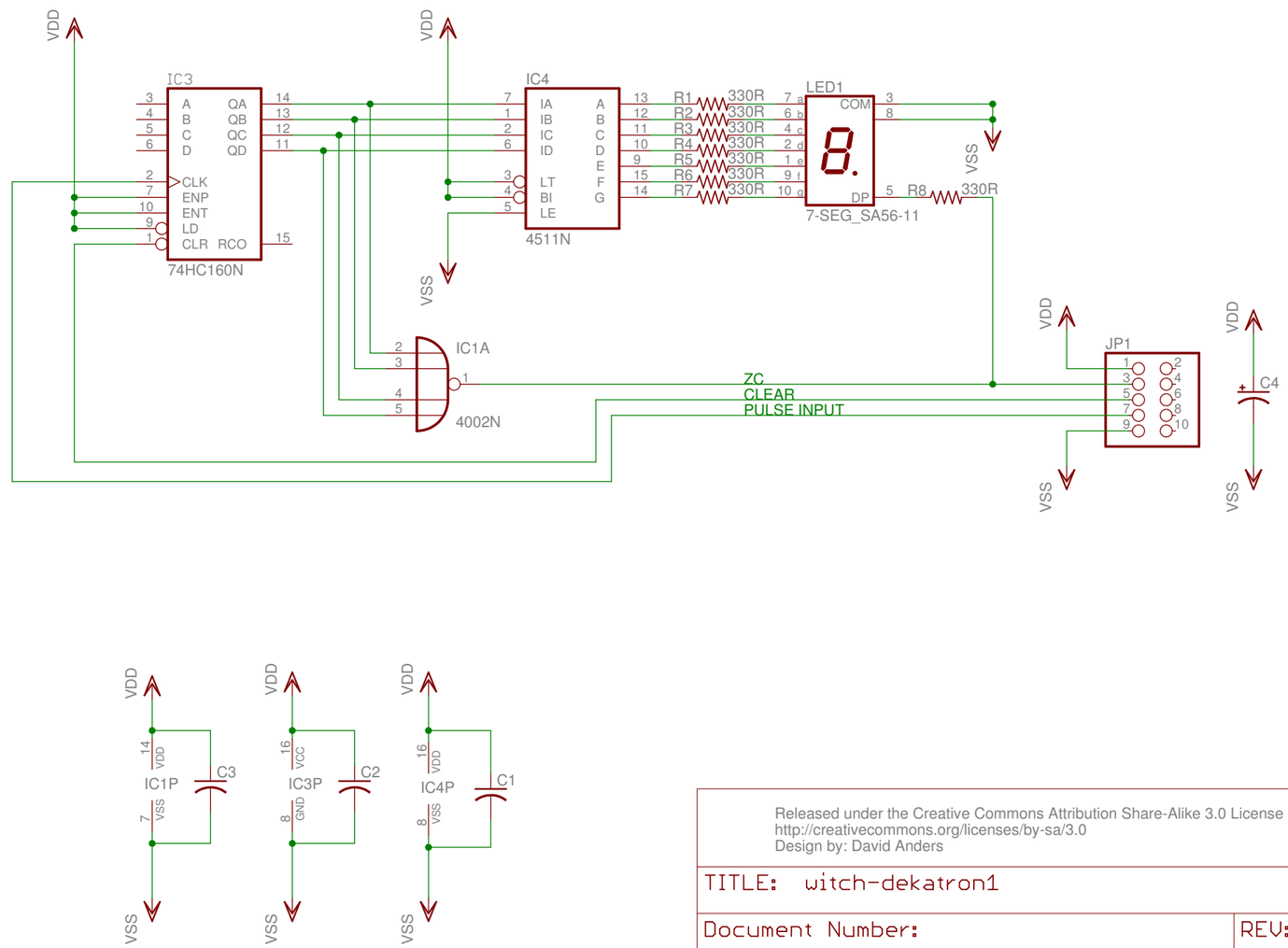

Released under the Creative Commons Attribution Share-Alike 3.0 License
http://creativecommons.org/licenses/by-sa/3.0
Design by: David Anders

TITLE: witch-dekatron1

Document Number:

REV:

Date: 5/22/14 10:37 AM

Sheet: 1/1