DIGITAL DESIGN

LAB7 COMBINATORIAL CIRCUIT - MUX - DMUX

2022 FALL TERM @ CSE . SUSETCH

LAB7

- Combinational circuit(3)
  - Multiplexer
    - The logical expression of Multiplexer
    - Using Multiplexer to implement a combinational circuit
  - Demultiplexer
- Practices

MULTIPLEXER

- a **Multiplexer** (or **mux**) is a device that selects one of several input signals and forwards the selected input to the output**.**
- A multiplexer of **2^n** inputs has **n** select lines. Select lines are used to select one of the input line to be sent to the output.
- Multiplexers are mainly used to increase the amount of data that can be sent over the network within a certain amount of time and bandwidth. A multiplexer is also called a **data selector**.
- Multiplexers can also be used to implement Boolean functions of multiple variables.

MULTIPLEXER(4-TO-1-LINE MULTIPLEXER1)

$$Y = m_0.D_0 + m_1.D_1 + m_2.D_2 + m_3.D_3$$

Y = (s1'.s0').D0 +(s1'.s0).D1+(s1.s0').D2+(s1.s0).D3

选择信号的数值对应输出信号下标

selection input		output
s1	s0	Y
0	0	D0
0	1	D1
1	0	D2
1	1	D3

function table for 4-to-1-line multiplexer

1. There are 4 input data ports(D0,D1,D2,D3), 2 select lines(S1,S0), 1 output port(Y).

The value of output Y is determined by the value of select lines and the related input data port.

(权重数)最高bit位

2. "s1" is the MSB of the select lines, "s0" is the LSB of the select lines.

(权重最小)最低bit位

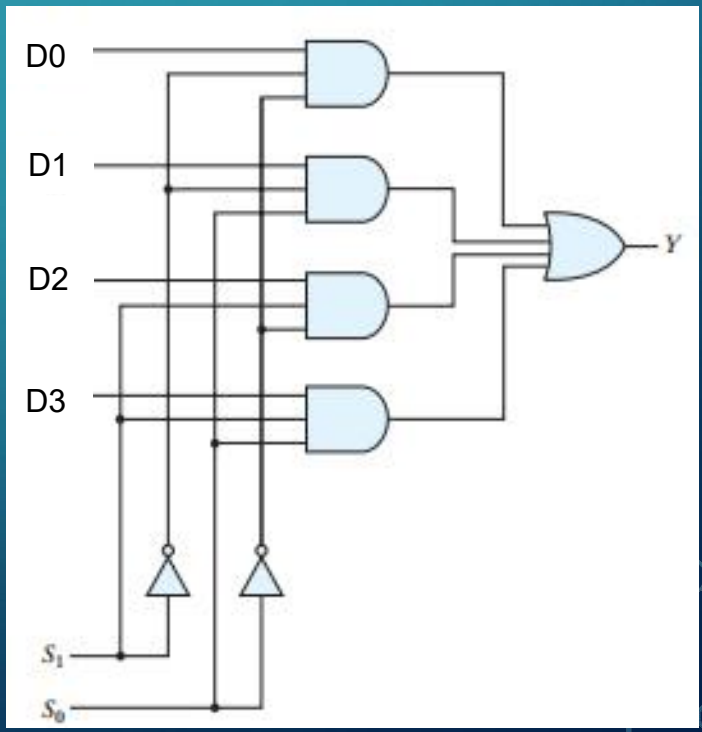

MULTIPLEXER(4-TO-1-LINE MULTIPLEXER2)

$$Y = m_0.D_0 + m_1.D_1 + m_2.D_2 + m_3.D_3$$

每种情况只有一个最小项为真

Y = (s1'.s0').D0 +(s1'.s0).D1+(s1.s0').D2+(s1.s0).D3

selection input		output
s1	s0	Y
0	0	D0
0	1	D1
1	0	D2
1	1	D3

function table for 4-to-1-line multiplexer

1. There are 4 input data ports(D0,D1,D2,D3), 2 select lines(S1,S0), 1 output port(Y).

The value of output Y is determined by the value of select lines and the related input data port.

2. "s1" is the MSB of the select lines, "s0" is the LSB of the select lines.

```
module multiplexer(
input D0, D1, D2, D3, //data-input
input [1:0] s, //select
output reg o
    );
   always @ * begin
        case(s)
            2'b00: o = D0;
            2'b01: o = D1;
            2'b10: o = D2;
            2'b11: o = D3;
        endcase
   end
endmodule
```

MULTIPLEXER(4-TO-1-LINE MULTIPLEXER3)

$$Y = m_0.D_0 + m_1.D_1 + m_2.D_2 + m_3.D_3$$

Y = (s1'.s0').D0 +(s1'.s0).D1+(s1.s0').D2+(s1.s0).D3

```
module multiplexer(
input D0, D1, D2, D3, //data-input
input [1:0] s, //select
output reg o
    );
   always @ * begin
        case(s)
            2'b00: o = D0;
            2'b01: o = D1;
            2'b10: o = D2;
            2'b11: o = D3;
        endcase
   end
endmodule
```

```
module mux_tb();
    reg sD0, sD1, sD2, sD3;
    reg [1:0]sS;
    wire sY;
    //module multiplexer( input D0, D1, D2, D3, input [1:0] s, output reg o);
    multiplexer u(sD0, sD1, sD2, sD3, sS, sY);
    initial begin
        {sS, sD0, sD1, sD2, sD3} = 6'b0;
        repeat(63) #10 {sS, sD0, sD1, sD2, sD3}  = {sS, sD0, sD1, sD2, sD3} + 1;
        #10 $finish;
    end
endmodule
```

MULTIPLEXER(4-TO-1-LINE MULTIPLEXER4)

selection input		output
s1	s0	Y
0	0	D0
0	1	D1
1	0	D2
1	1	D3

function table for 4-to-1-line multiplexer

$$Y = m_0.D_0 + m_1.D_1 + m_2.D_2 + m_3.D_3$$

Y = (s1'.s0').D0 +(s1'.s0).D1+(s1.s0').D2+(s1.s0).D3

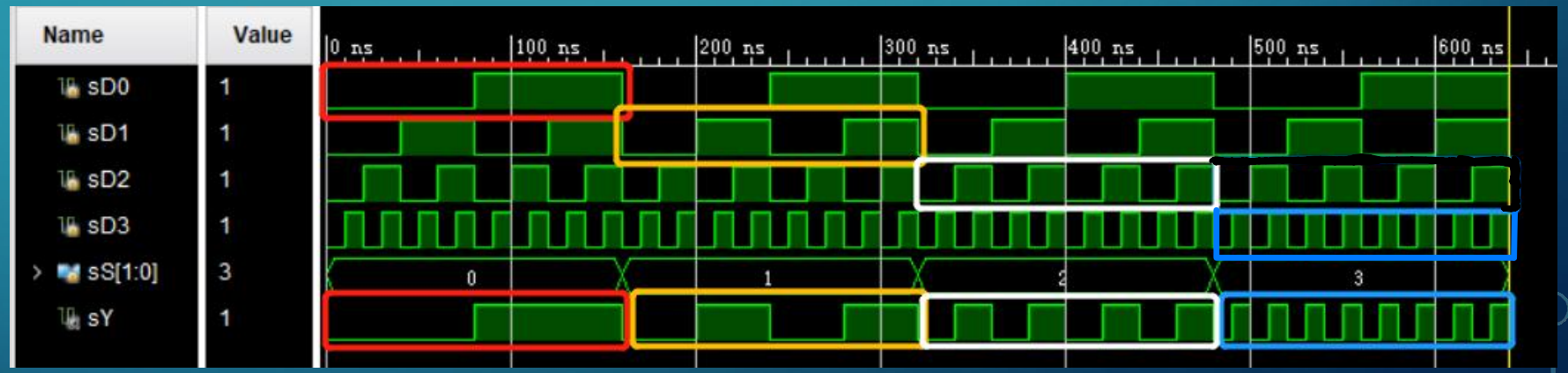

MULTIPLEXER(74151:8-TO-1-LINE MULTIPLEXER1)

inputs				output	
EN	S2	S1	S0	Y	W
1	X	X	X	0	1
0	0	0	0	D0	D0'
0	0	0	1	D1	D1'
0	0	1	0	D2	D2'
0	0	1	1	D3	D3'
0	1	0	0	D4	D4'
0	1	0	1	D5	D5'
0	1	1	0	D6	D6'
0	1	1	1	D7	D7'

function table for 74151

→ 有些是高电瓶信号,有些是低电瓶信号

1. EN is low level effective. 0激活

While EN is effective, the circuit work as a 8-to-1-line multiplexer.

2. There are 8 input data ports, 3 select lines.

The value of output Y is determined by the value of select lines and the related input data port, W is the invert of Y.

3. "s2" is the MSB of the select lines, "s0" is the LSB of the select lines.

```
module multiplexer74151( EN,S2,S1,S0,D7,D6,
D5,D4,D3, D2,D1,D0,Y,W);
    input EN, S2, S1,S0, D7, D6, D5,
     D4, D3, D2, D1, D0;
    output reg Y;
    output W;
    always @*
    if (~EN)
        case ({S2,S1,S0})
            3'b000: Y = D0;
            3'b001: Y = D1;
            3'b010: Y = D2;
            3'b011: Y = D3;
            3'b100: Y = D4;
            3'b101: Y = D5;
            3'b110: Y = D6;
            3'b111: Y = D7;
        endcase
    else
        Y = 1'b0;
    assign W=~Y;
endmodule
```

有赋值 W只能用wire

↓ 更换和case的顺序也不影响(并行的)

MULTIPLEXER(74151:8-TO-1-LINE MULTIPLEXER2)

inputs				output	
EN	S_2	S1	S0	Y	W
1	X	X	X	0	1
0	0	0	0	D0	D0'
0	0	0	1	D1	D1'
0	0	1	0	D2	D2'
0	0	1	1	D3	D3'
0	1	0	0	D4	D4'
0	1	0	1	D5	D5'
0	1	1	0	D6	D6'
0	1	1	1	D7	D7'

function table for 74151

While EN is effective, the logical express of 74151 (about output Y and data inputs and the select lines) is :

S2 is MSB, S0 is LSB

$$Y = m_0.D_0 + m_1.D_1 + m_2.D_2 + m_3.D_3 + m_4.D_4 + m_5.D_5 + m_6.D_6 + m_7.D_7$$

The logical express of 74151 is :

$$Y = EN'.$$
$$(m_0.D_0 + m_1.D_1 + m_2.D_2 + m_3.D_3 + m_4.D_4 + m_5.D_5 + m_6.D_6 + m_7.D_7)$$

W = Y'

MULTIPLEXER(IMPLEMENT BOOLEAN FUNCTIONS1)

- Use 74151 implement the following logic function.

$$F(A,B,C) = \boldsymbol{\overline{A}\,\overline{C} + \overline{B}\,\overline{C} + \overline{A}B + BC}$$
$$= \overline{A}\,\overline{B}\,\overline{C} + \overline{A}B\overline{C} + A\overline{B}\,\overline{C} + \overline{A}\,\overline{B}\,\overline{C} + \overline{A}B\overline{C} + \overline{A}BC + ABC + \overline{A}BC$$
$$= \overline{A}\,\overline{B}\,\overline{C} + \overline{A}B\overline{C} + A\overline{B}\,\overline{C} + \overline{A}BC + ABC$$
$$= \boldsymbol{\overline{A}\,\overline{B}\,\overline{C} + \overline{A}B\overline{C} + \overline{A}BC + A\overline{B}\,\overline{C} + ABC}$$
$$= \boldsymbol{m_0.1 + m_1.0 + m_2.1 + m_3.1 + m_4.1 + m_5.0 + m_6.0 + m_7.1}$$

While EN is effective, the logical express of 74151 (about output Y and data inputs and the select lines) is :

$$\boldsymbol{Y = m_0.D_0 + m_1.D_1 + m_2.D_2 + m_3.D_3 + m_4.D_4 + m_5.D_5 + m_6.D_6 + m_7.D_7}$$

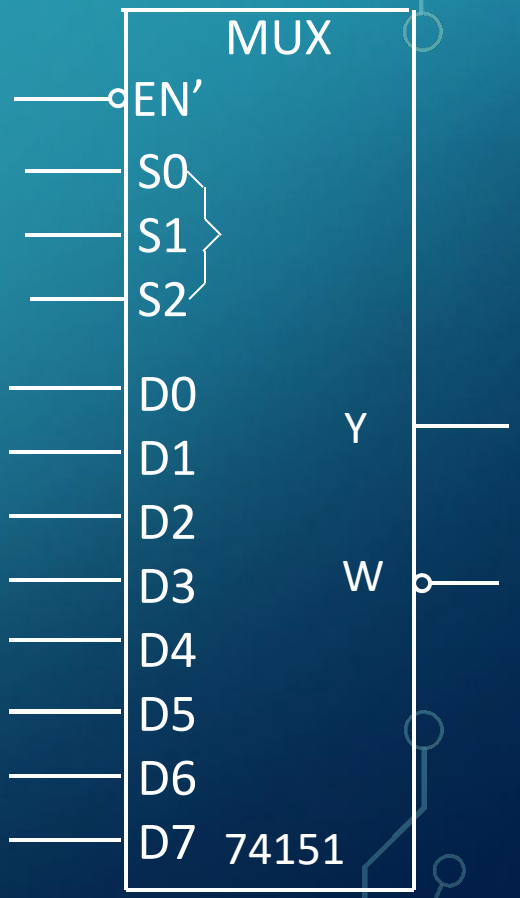

MULTIPLEXER(IMPLEMENT BOOLEAN FUNCTIONS2)

```
module multiplexer74151( EN,S2,S1,S0,D7,D6,D5,D4,D3,  D2,D1,D0,Y,W);
    input EN,  S2,  S1,S0,  D7,  D6,  D5,
     D4,  D3,   D2,  D1,   D0;
    output reg Y;
    output W;
    always @*
    if (~EN)
        case ({S2,S1,S0})
            3'b000: Y = D0;
            3'b001: Y = D1;
            3'b010: Y = D2;
            3'b011: Y = D3;
            3'b100: Y = D4;
            3'b101: Y = D5;
            3'b110: Y = D6;
            3'b111: Y = D7;
        endcase
    else
        Y = 1'b0;
    assign W=~Y;
endmodule
```

$$F(A,B,C) = \overline{A}\overline{C} + \overline{B}\overline{C} + \overline{A}B + BC$$

```
module fun_a_b_c(input A,B,C,output F );
    assign F=( (~A)&(~C) ) | ( (~B)&(~C) )  | ((~A)&B) | (B&C) ;
endmodule
```

$$F(A,B,C) = m_0.1 + m_1.0 + m_2.1 + m_3.1 + m_4.1 + m_5.0 + m_6.0 + m_7.1$$

```
module fun_a_b_c_use_mux(input A,B,C, output F);
wire sen,sd7,sd6,sd5,sd4,sd3,sd2,sd1,sd0;
wire snf;

assign {sen,sd7,sd5,sd4,sd3,sd2,sd1,sd0}= 9'b0_1001_1101;

multiplexer74151 u74151(.EN(sen),
.S2(A),.S1(B),.S0(C),
.D7(sd7),.D6(sd6),.D5(sd5),.D4(sd4),.D3(sd3),.D2(sd2),.D1(sd1),.D0(sd0),
.Y(F),.W(snf));

endmodule
```

MULTIPLEXER(IMPLEMENT BOOLEAN FUNCTIONS-3)

```
`timescale 1ns / 1ps
//////////////////////////////////////////////////////////////////////////////////...
module fun_abc_sim( );
reg sa,sb,sc;
wire sf,sf_mux;
fun_a_b_c uf(.A(sa),.B(sb),.C(sc),.F(sf));
fun_a_b_c_use_mux uf_mux(.A(sa),.B(sb),.C(sc),.F(sf_mux));
/*...*/
initial
begin
    {sa,sb,sc} = 3'b000;
    repeat(7)
    begin
        #100 {sa,sb,sc} = {sa,sb,sc} + 1;
        $display($time,"{sa,sb,sc}=%d_%d_%d sf=%d sf_mux=%d",sa,sb,sc,sf,sf_mux);
    end
    #100 $finish();
end
endmodule
```

$$F(A,B,C) = \overline{A}\,\overline{C} + \overline{B}\,\overline{C} + \overline{A}B + BC$$

```
                    100{sa,sb,sc}=0_0_1 sf=1 sf_mux=1
                    200{sa,sb,sc}=0_1_0 sf=0 sf_mux=0
                    300{sa,sb,sc}=0_1_1 sf=1 sf_mux=1
                    400{sa,sb,sc}=1_0_0 sf=1 sf_mux=1
                    500{sa,sb,sc}=1_0_1 sf=1 sf_mux=1
                    600{sa,sb,sc}=1_1_0 sf=0 sf_mux=0
                    700{sa,sb,sc}=1_1_1 sf=0 sf_mux=0
$finish called at time : 800 ns : File "D:/xilinx_wor
```

PRACTICE1

Use 74151(8-to-1-line multiplexer) realize the following logic function

$F(A,B,C) = \overline{A}\overline{C} + \overline{B}\overline{C} + \overline{A}B + BC$

- It is asked that A is the LSB of select lines , C is the MSB of select lines.
- Do the design and verify the function of your design.

$F(CBA) = \bar{C}\bar{B}\bar{A} + \bar{C}B\bar{A} + \bar{C}B\bar{A} + \bar{C}\bar{B}A + C\bar{B}\bar{A} + \bar{C}BA + CBA + CB\bar{A}$

$= \bar{C}\bar{B}\bar{A} + \bar{C}\bar{B}A + \bar{C}B\bar{A} + \bar{C}BA + CB\bar{A} + CBA$

$= \Sigma(0, 1, 2, 3, 6, 7)$

PRACTICE2

Use 74151(8-to-1-line multiplexer) realize the following logic function
Y = A’B’C’D’ + BC’D + A’C’D + A’BCD + ACD

- Do the design and verify the function of your design.
- Create the constraint file, do the synthetic and implementation, generate the bitstream file and program the device, then test on the minisys develop board.

DE-MULTIPLEXER

- a **De-multiplexer** (or **De-mux**) is a device taking a single input signal and selecting one of many data-output-lines, which is connected to the single input.

selection input		output			
S1	S0	Y3	Y2	Y1	Y0
0	0	0	0	0	D
0	1	0	0	D	0
1	0	0	D	0	0
1	1	D	0	0	0

function table of 1-to-4 de-multiplexer
D is the data input

DE-MULTIPLEXER1

selection input		output			
S1	S0	Y3	Y2	Y1	Y0
0	0	0	0	0	D
0	1	0	0	D	0
1	0	0	D	0	0
1	1	D	0	0	0

function table of 1-to-4 de-multiplexer
D is the data input

```
module demultiplexer(
    input D,
    input [1:0] S,
    output reg Y0,
    output reg Y1,
    output reg Y2,
    output reg Y3
    );
    always@*
    begin
        case (S)
        2'b00: {Y3, Y2, Y1, Y0}={1'b0, 1'b0, 1'b0, D};
        2'b01: {Y3, Y2, Y1, Y0}={1'b0, 1'b0, D, 1'b0};
        2'b10: {Y3, Y2, Y1, Y0}={1'b0, D, 1'b0, 1'b0};
        2'b11: {Y3, Y2, Y1, Y0}={D, 1'b0, 1'b0, 1'b0};
        endcase;
    end
endmodule
```

DE-MULTIPLEXER2

selection input		output			
S1	S0	Y3	Y2	Y1	Y0
0	0	0	0	0	D
0	1	0	0	D	0
1	0	0	D	0	0
1	1	D	0	0	0

function table of 1-to-4 de-multiplexer
D is the data input

```
module demultiplexer_tb();
    reg [1:0] sS;
    reg sD;
    wire sY0, sY1, sY2, sY3;
    demultiplexer u(sD, sS, sY0, sY1, sY2, sY3);
    initial
    begin
        {sD, sS} = 3'b000;
        repeat(7) #10 {sD, sS} = {sD, sS}+1;
        #10 $finish;
    end
endmodule
```

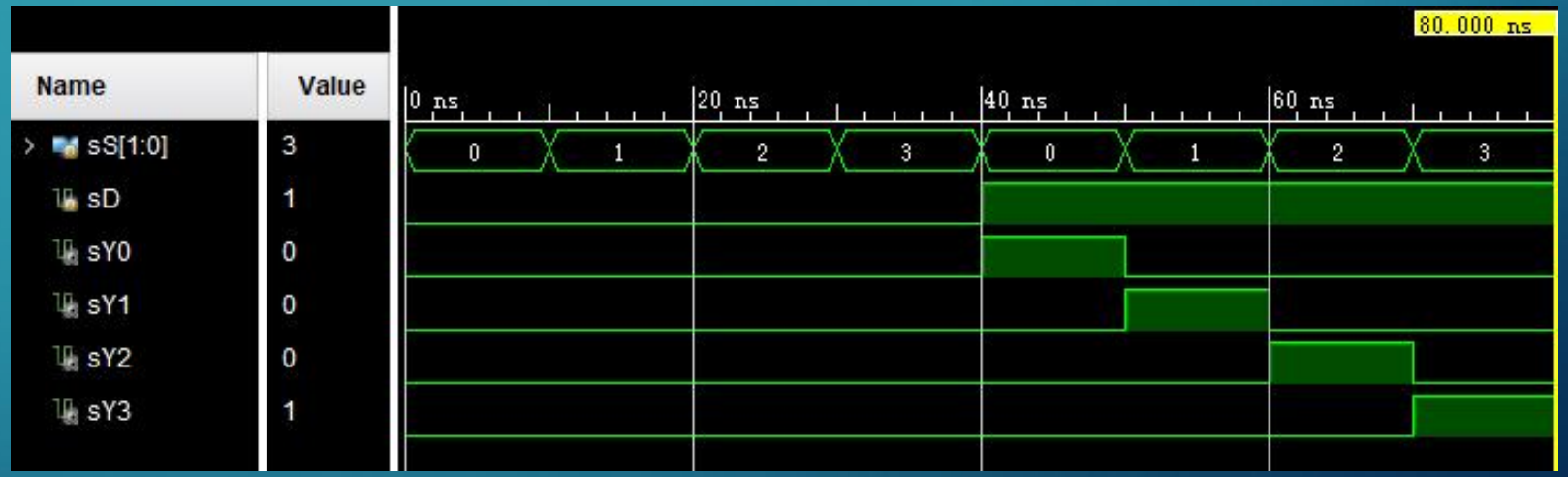

PRACTICE3

1. Is there any relationship between Decoder and De-mux?
2. Please try to implement a 1-4 De-mux by using a 2-4 Decoder