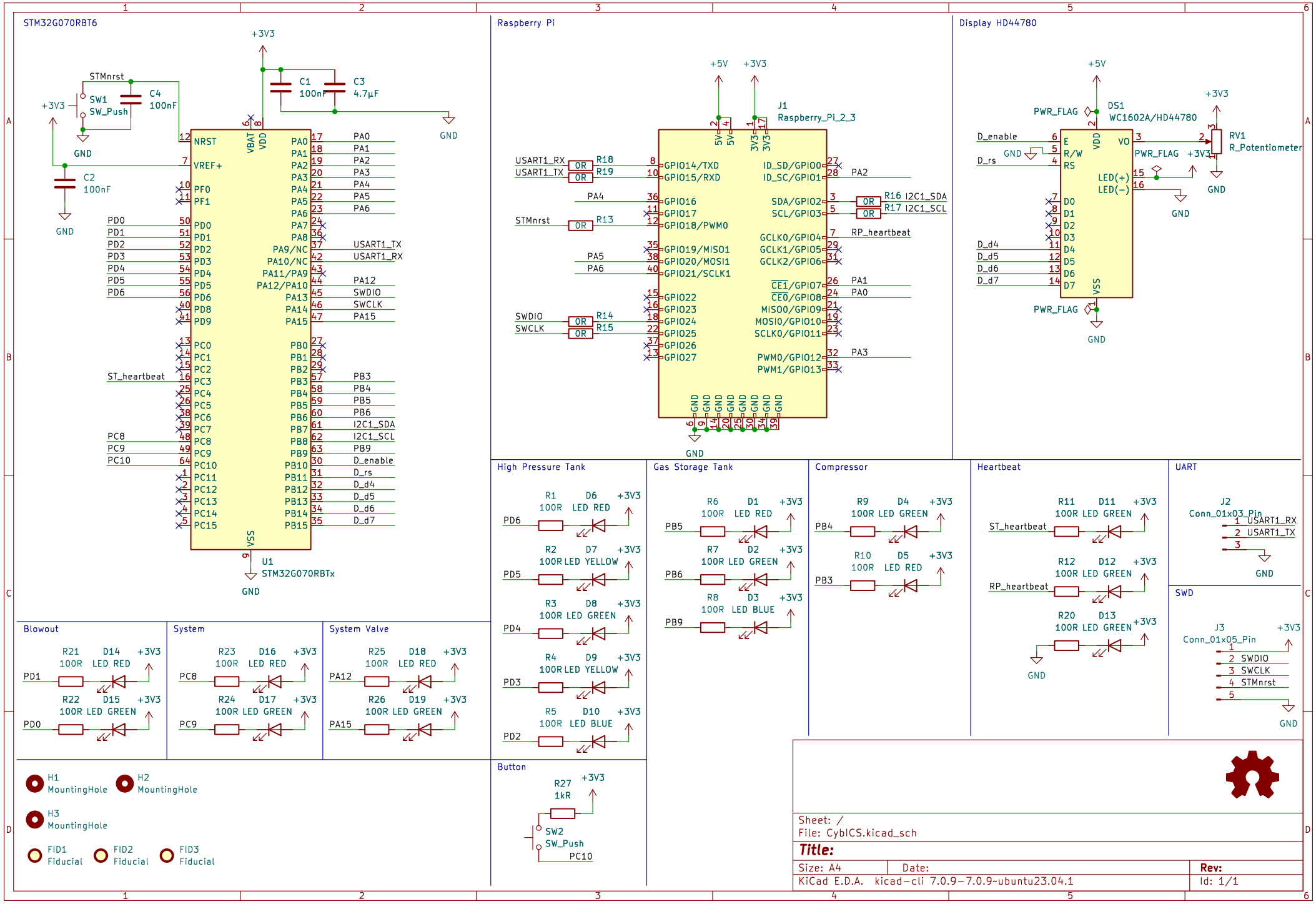
STM32G070RBT6
U1
STM32G070RBTx
Raspberry Pi
J1
Raspberry_Pi_2_3
Display HD44780
DS1
WC1602A/HD44780
RV1
R_Potentiometer
High Pressure Tank
Gas Storage Tank
Compressor
Heartbeat
UART
J2
Conn_01x03_Pin
SWD
J3
Conn_01x05_Pin
Blowout
System
System Valve
Button
SW1
SW_Push
SW2
SW_Push
H1
MountingHole
H2
MountingHole
H3
MountingHole
FID1
Fiducial
FID2
Fiducial
FID3
Fiducial
Sheet: /
File: CybICS.kicad_sch
Title:
Size: A4
Date:
Rev:
KiCad E.D.A. kicad-cli 7.0.9-7.0.9~ubuntu23.04.1
Id: 1/1