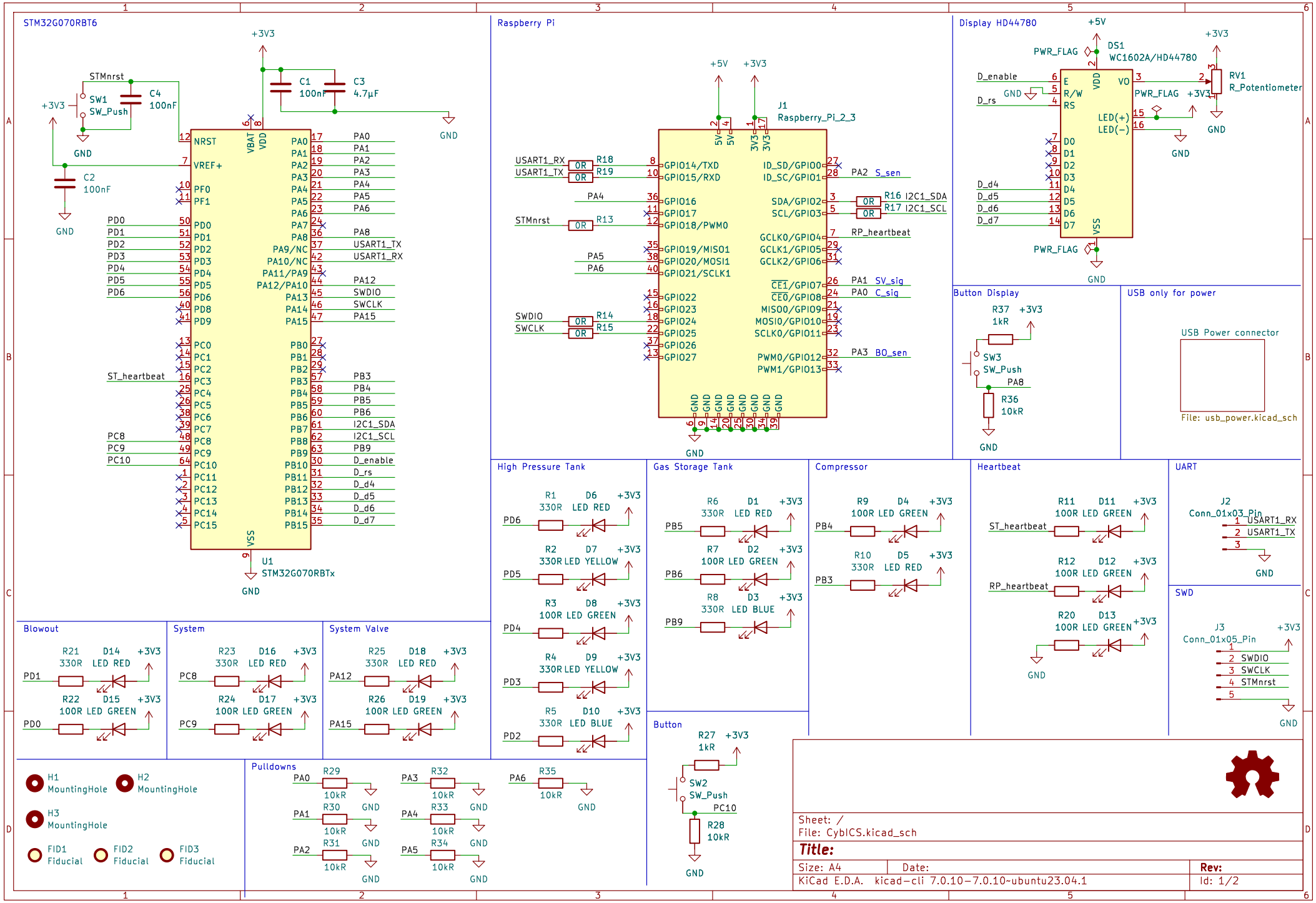
STM32G070RBT6
U1
STM32G070RBTx
Raspberry Pi
J1
Raspberry_Pi_2_3
Display HD44780
DS1
WC1602A/HD44780
RV1
R_Potentiometer
Button Display
USB only for power
USB Power connector
File: usb_power.kicad_sch
High Pressure Tank
Gas Storage Tank
Compressor
Heartbeat
UART
J2
Conn_01x03_Pin
SWD
J3
Conn_01x05_Pin
Blowout
System
System Valve
Pulldowns
Button
H1 MountingHole
H2 MountingHole
H3 MountingHole
FID1 Fiducial
FID2 Fiducial
FID3 Fiducial
Sheet: /
File: CybICS.kicad_sch
Title:
Size: A4
Date:
Rev:
KiCad E.D.A. kicad-cli 7.0.10-7.0.10~ubuntu23.04.1
Id: 1/2

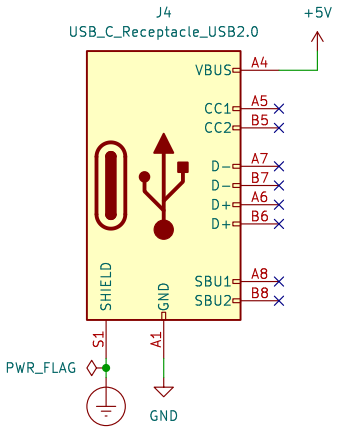

Sheet: /USB Power connector/
File: usb_power.kicad_sch

Title:

Size: A4	Date:	Rev:
KiCad E.D.A. kicad−cli 7.0.10−7.0.10~ubuntu23.04.1		Id: 2/2