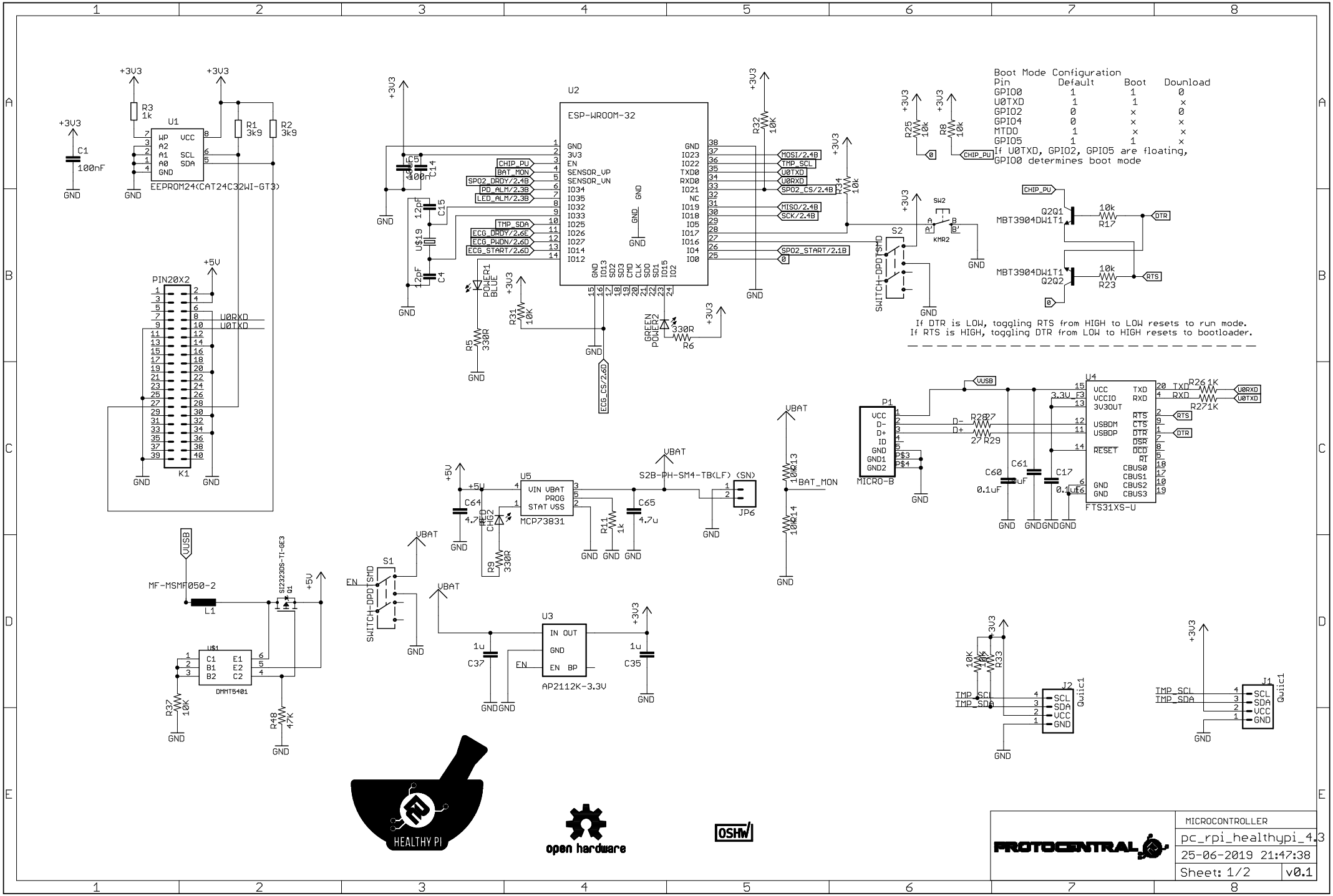

11-03-2020 11:46:13 f=0.73 C:\Users\manik\Circuitects Dropbox\mani kandan\ces-shared\pcb\active\pc_rpi_healthypi4.3\pc_rp

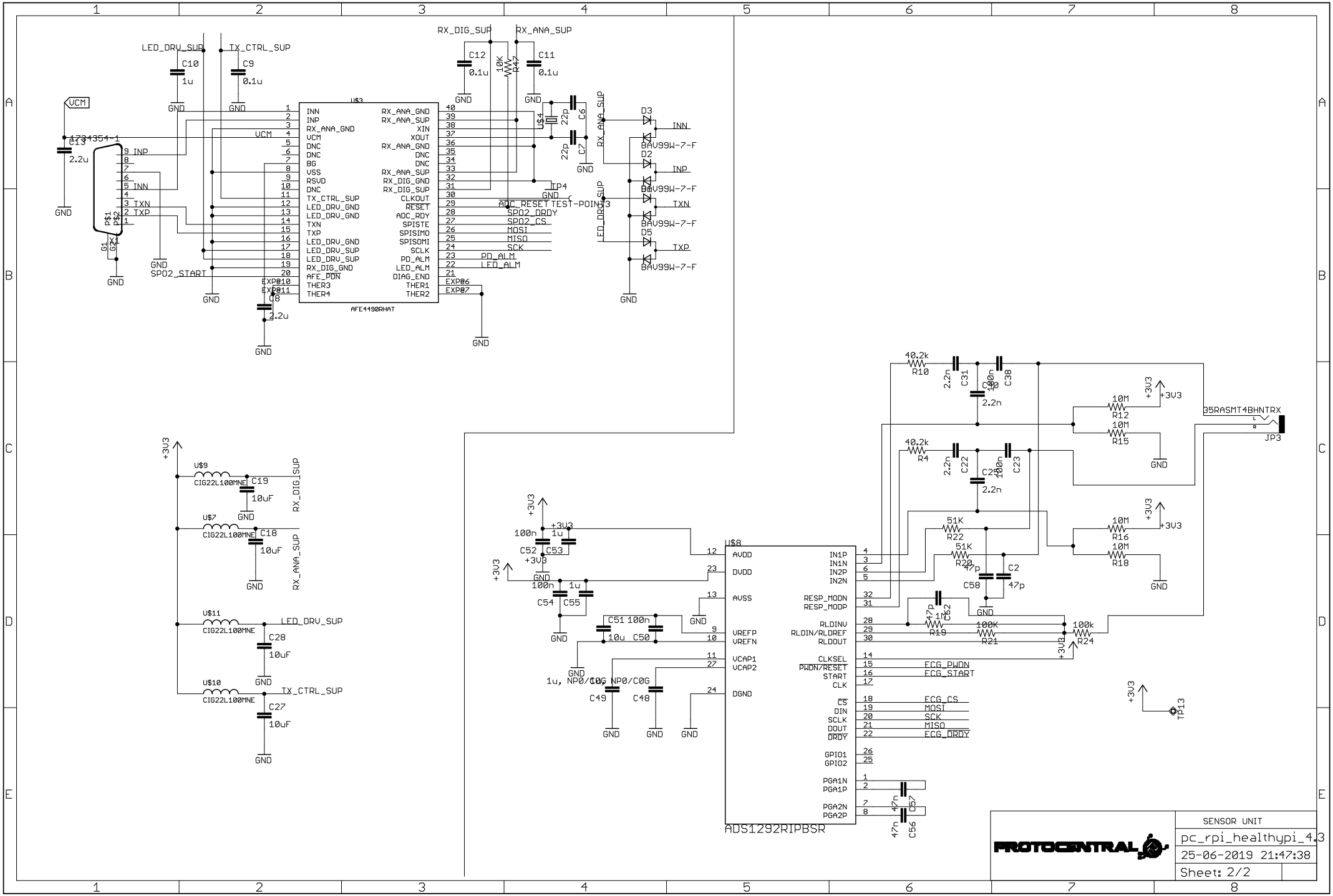
U$3
AFE4490RHAT
INN
INP
RX_ANA_GND
VCM
DNC
BG
VSS
RSVD
TX_CTRL_SUP
LED_DRV_GND
TXN
TXP
LED_DRV_SUP
AFE_PDN
THER3
THER4
XIN
XOUT
CLKOUT
RESET
ADC_RDY
SPISTE
SPISIMO
SPISOMI
SCLK
PD_ALM
LED_ALM
DIAG_END
THER1
THER2
EXP06
EXP07
EXP010
EXP011
RX_DIG_SUP
RX_ANA_SUP
LED_DRV_SUP
TX_CTRL_SUP
SPO2_START
ADC_RESET
SPO2_DRDY
SPO2_CS
MOSI
MISO
SCK
PD_ALM
LED_ALM
TEST-POINT3
TP4
D3
D2
D5
BAV99W-7-F
1734351-1
U$8
ADS1292RIPBSR
AVDD
DVDD
AVSS
VREFP
VREFN
VCAP1
VCAP2
DGND
IN1P
IN1N
IN2P
IN2N
RESP_MODN
RESP_MODP
RLDINV
RLDIN/RLDREF
RLDOUT
CLKSEL
PWDN/RESET
START
CLK
CS
DIN
SCLK
DOUT
DRDY
GPIO1
GPIO2
PGA1N
PGA1P
PGA2N
PGA2P
ECG_PWDN
ECG_START
ECG_CS
MOSI
SCK
MISO
ECG_DRDY
35RASMT4BHNTRX
JP3
U$9
U$7
U$11
U$10
CIG22L100MNE
RX_DIG_SUP
RX_ANA_SUP
LED_DRV_SUP
TX_CTRL_SUP
+3V3
GND
VCM
TP13
PROTOCENTRAL
SENSOR UNIT
pc_rpi_healthypi_4.3
25-06-2019 21:47:38
Sheet: 2/2