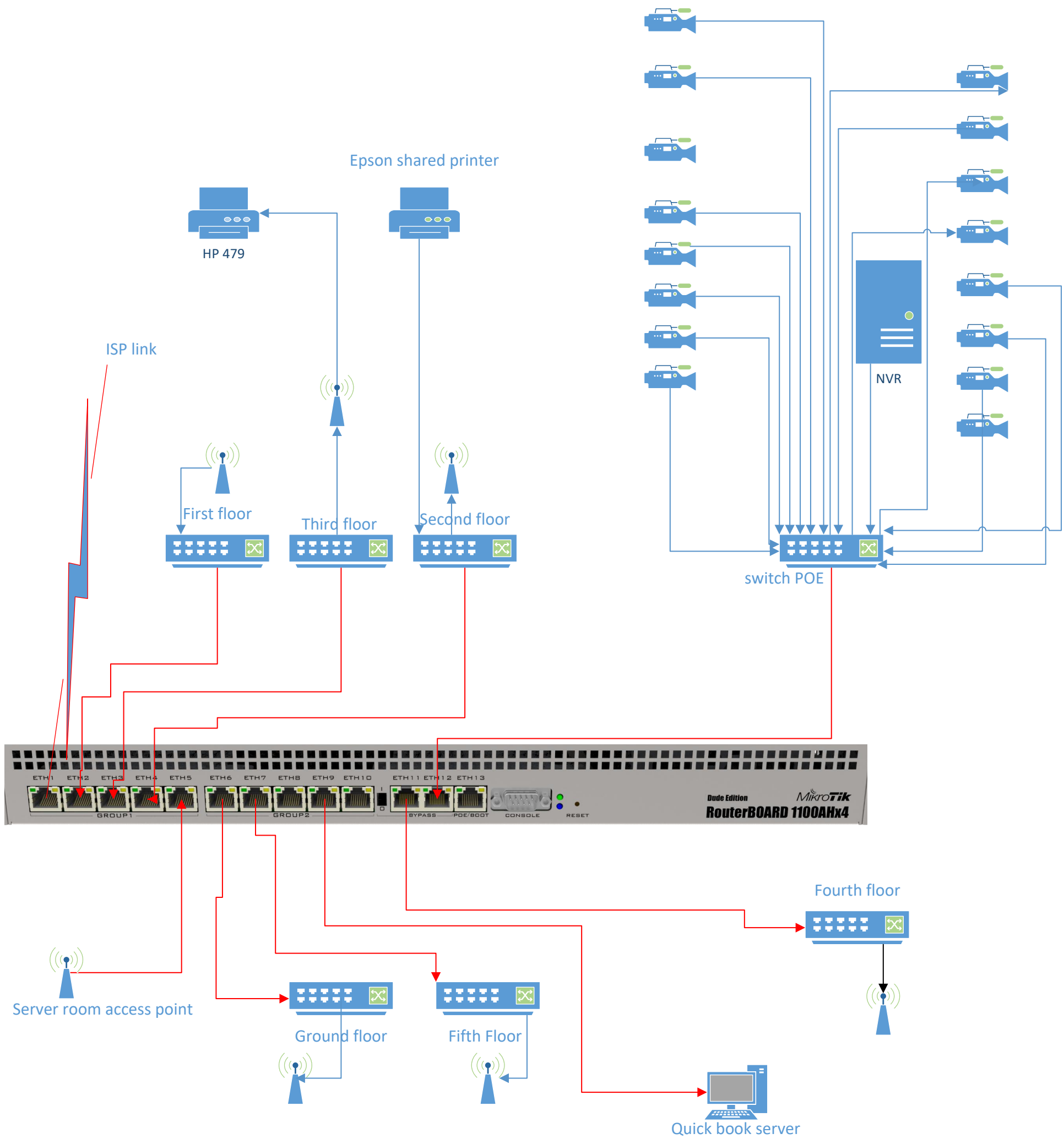
Epson shared printer
HP 479
ISP link
NVR
First floor
Third floor
Second floor
switch POE
ETH1 ETH2 ETH3 ETH4 ETH5 ETH6 ETH7 ETH8 ETH9 ETH10 ETH11 ETH12 ETH13
GROUP1
GROUP2
BYPASS
POE/BOOT
CONSOLE
RESET
Dude Edition
MikroTik
RouterBOARD 1100AHx4
Fourth floor
Server room access point
Ground floor
Fifth Floor
Quick book server

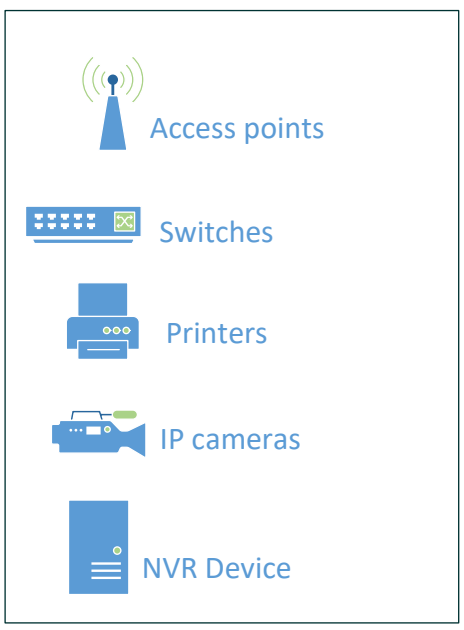
Access points
Switches
Printers
IP cameras
NVR Device