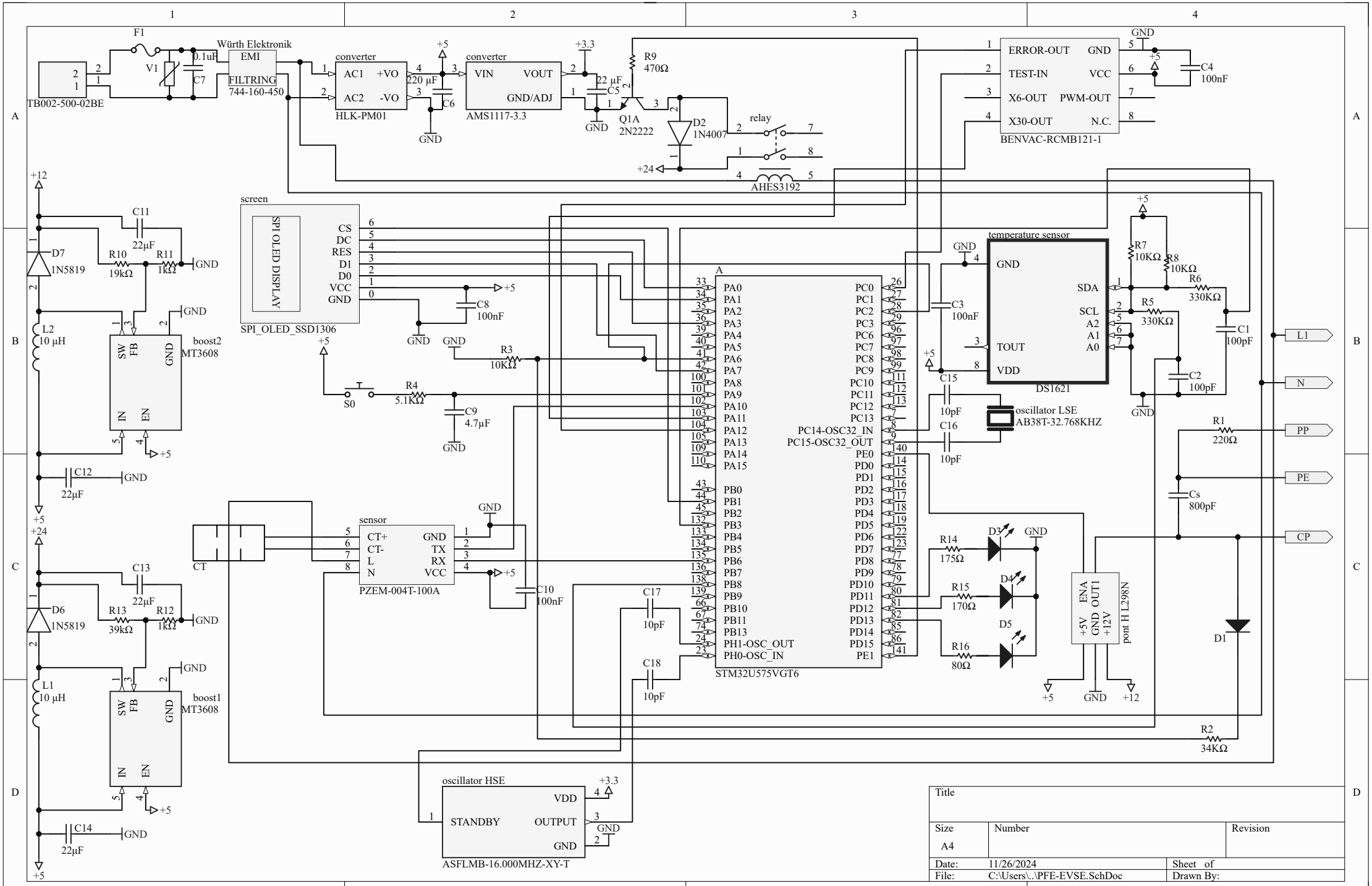
TB002-500-02BE
F1
V1
0.1uF
C7
Würth Elektronik
EMI
FILTRING
744-160-450
converter
AC1
AC2
+VO
-VO
HLK-PM01
220 µF
C6
GND
+5
converter
VIN
VOUT
GND/ADJ
AMS1117-3.3
+3.3
22 µF
C5
R9
470Ω
Q1A
2N2222
D2
1N4007
+24
relay
AHES3192
ERROR-OUT
TEST-IN
X6-OUT
X30-OUT
GND
VCC
PWM-OUT
N.C.
BENVAC-RCMB121-1
C4
100nF
+12
C11
22µF
D7
1N5819
R10
19kΩ
R11
1kΩ
L2
10 µH
boost2
MT3608
SW
FB
GND
IN
EN
C12
22µF
screen
SPI OLED DISPLAY
CS
DC
RES
D1
D0
VCC
GND
SPI_OLED_SSD1306
C8
100nF
R3
10KΩ
S0
R4
5.1KΩ
C9
4.7µF
CT
sensor
CT+
CT-
L
N
TX
RX
PZEM-004T-100A
C10
100nF
C13
22µF
D6
1N5819
R13
39kΩ
R12
1kΩ
L1
10 µH
boost1
MT3608
C14
22µF
oscillator HSE
STANDBY
VDD
OUTPUT
ASFLMB-16.000MHZ-XY-T
STM32U575VGT6
PA0
PA1
PA2
PA3
PA4
PA5
PA6
PA7
PA8
PA9
PA10
PA11
PA12
PA13
PA14
PA15
PB0
PB1
PB2
PB3
PB4
PB5
PB6
PB7
PB8
PB9
PB10
PB11
PB13
PH1-OSC_OUT
PH0-OSC_IN
PC0
PC1
PC2
PC3
PC6
PC7
PC8
PC9
PC10
PC11
PC12
PC13
PC14-OSC32_IN
PC15-OSC32_OUT
PE0
PD0
PD1
PD2
PD3
PD4
PD5
PD6
PD7
PD8
PD9
PD10
PD11
PD12
PD13
PD14
PD15
PE1
C17
10pF
C18
10pF
C3
100nF
temperature sensor
GND
SDA
SCL
A2
A1
A0
TOUT
VDD
DS1621
R7
10KΩ
R8
10KΩ
R6
330KΩ
R5
330KΩ
C1
100pF
C2
100pF
C15
10pF
C16
10pF
oscillator LSE
AB38T-32.768KHZ
R1
220Ω
Cs
800pF
R14
175Ω
R15
170Ω
R16
80Ω
D3
D4
D5
ENA
OUT1
+5V
GND
+12V
port H L298N
D1
R2
34KΩ
L1
N
PP
PE
CP
Title
Size
A4
Number
Revision
Date: 11/26/2024
File: C:\Users\..\PFE-EVSE.SchDoc
Sheet of
Drawn By: