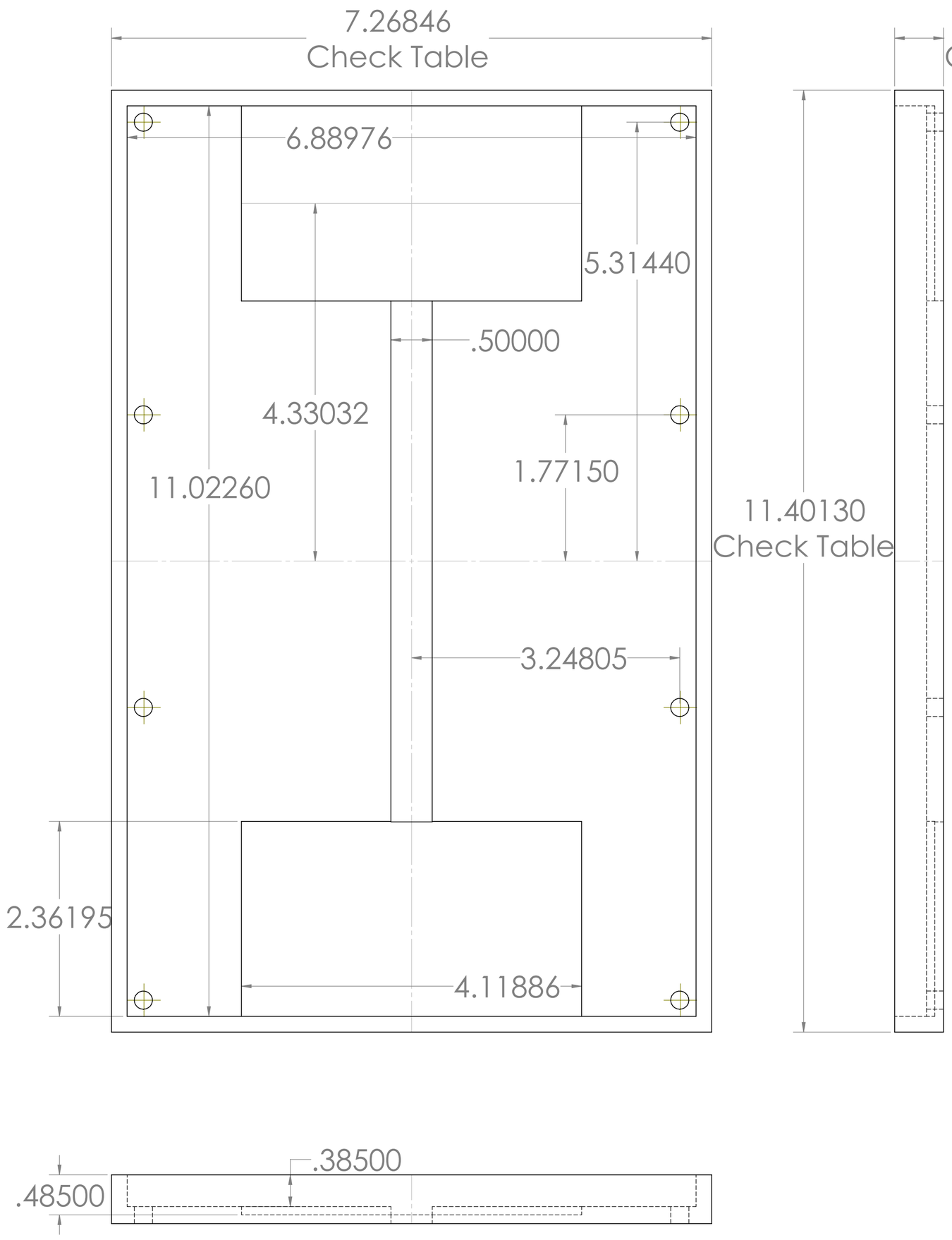

	Length	Width	Height	Depth
C1				
C2				
C3				

(X3) S111InsulC_V4

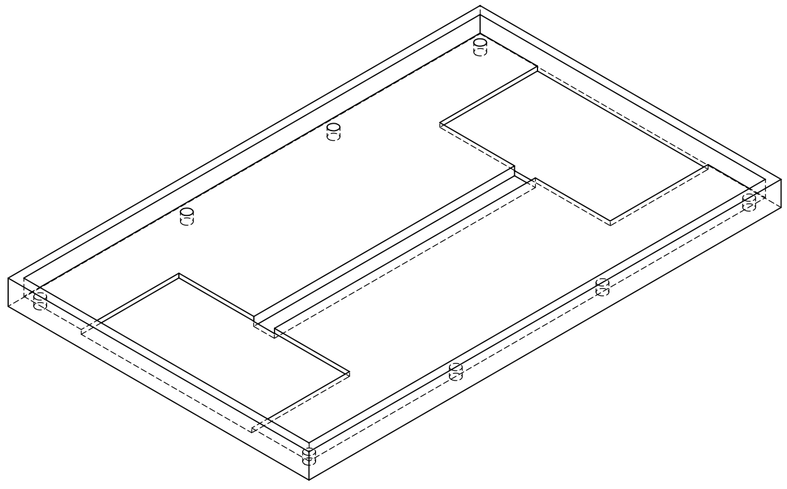

UNLESS OTHERWISE SPECIFIED:		NAME	DATE
DIMENSIONS ARE IN INCHES TOLERANCES: FRACTIONAL ± ANGULAR: MACH ± BEND ± TWO PLACE DECIMAL ± THREE PLACE DECIMAL ±	DRAWN	D. Biles	6-24-2015
	CHECKED		
	ENG APPR.		
	MFG APPR.		
INTERPRET GEOMETRIC TOLERANCING PER:	Q.A.		
MATERIAL	COMMENTS:		
FINISH			
DO NOT SCALE DRAWING			

TITLE:

Insulation C

SIZE	DWG. NO.	REV
C		

SCALE: 1:1 | WEIGHT: | SHEET 1 OF 1