MachXO5-NX Development Board

Evaluation Board User Guide

FPGA-EB-02052-1.1

December 2022

Disclaimers

Lattice makes no warranty, representation, or guarantee regarding the accuracy of information contained in this document or the suitability of its products for any particular purpose. All information herein is provided AS IS, with all faults and associated risk the responsibility entirely of the Buyer. Buyer shall not rely on any data and performance specifications or parameters provided herein. Products sold by Lattice have been subject to limited testing and it is the Buyer's responsibility to independently determine the suitability of any products and to test and verify the same. No Lattice products should be used in conjunction with mission- or safety-critical or any other application in which the failure of Lattice's product could create a situation where personal injury, death, severe property or environmental damage may occur. The information provided in this document is proprietary to Lattice Semiconductor, and Lattice reserves the right to make any changes to the information in this document or to any products at any time without notice.

© 2022 Lattice Semiconductor Corp. All Lattice trademarks, registered trademarks, patents, and disclaimers are as listed at www.latticesemi.com/legal.
All other brand or product names are trademarks or registered trademarks of their respective holders. The specifications and information herein are subject to change without notice.

Contents

Acronyms in This Document 6
1. Introduction 7
1.1. MachXO5-NX Development Board 7
1.2. Features 8
1.3. MachXO5-25 Device 9
2. Applying Power to the Board 10
3. Hard JTAG/I^{2}C Programming 12
3.1. JTAG Download Interface 12
3.2. I^{2}C Download Interface 14
4. Soft JTAG/UART User Interface 15
4.1. Soft JTAG User Interface 15
4.2. Soft UART User Interface 15
5. MachXO5-25 Clock Sources 17
6. SGMII Ethernet Connections 18
7. HyperRAM 20
8. Generating the Programming File 21
9. Programming the MachXO5-NX Device 23
10. Headers and Test Connections 27
10.1. Versa Headers 27
10.2. Arduino Board GPIO Headers 29
10.3. FX12 Headers 30
10.4. Aardvark Header (DNI) 32
10.5. Raspberry Pi Board GPIO Header 33
10.6. PMOD Headers 34
10.7. MIPI Camera Header 34
10.8. User I^{2}C Interface 36
10.9. ADC and Potentiometer 37
10.10. Other Test Points 38
11. LEDs and Switches 39
11.1. Four-Position DIP Switch 39
11.2. General Purpose Push Buttons 39
11.3. General Purpose LEDs 40
11.4. Seven-Segment Display 40
12. Software Requirements 42
13. Storage and Handling 42
14. Ordering Information 42
Technical Support Assistance 43
Appendix A. MachXO5-NX Development Board Schematics 44
Appendix B. MachXO5-NX Development Board Bill of Materials 55
Appendix C. User Defined Preference File Listing 62
Appendix D. MachXO5-NX Development Board Revision Information 66
References 67
Revision History 68

© 2022 Lattice Semiconductor Corp. All Lattice trademarks, registered trademarks, patents, and disclaimers are as listed at www.latticesemi.com/legal.
All other brand or product names are trademarks or registered trademarks of their respective holders. The specifications and information herein are subject to change without notice.

Figures

Figure 1.1. Top View of MachXO5-NX Development Board 7
Figure 1.2. Bottom View of MachXO5-NX Development Board 8
Figure 2.1. Board Power Supply 10
Figure 3.1. JTAG/I^{2}C Programming Architecture 12
Figure 3.2. Radiant Programmer Detect Dual Ports 12
Figure 3.3. Level Shift for JTAG Download Interface 13
Figure 3.4. JTAG Test Header 13
Figure 3.5. I^{2}C Programming Mode 14
Figure 4.1. JTAG/UART User Interfacing 15
Figure 5.1. Onboard Clock Resources 17
Figure 8.1. Radiant Software – Open Project Dialog Box 21
Figure 8.2. Radiant Software – Process Toolbar initial state 22
Figure 8.3. Radiant Software –Processes Toolbar completed state 22
Figure 9.1. Radiant Software – Radiant Programmer 23
Figure 9.2. Radiant Programmer - Initial Opened 24
Figure 9.3. Radiant Programmer -Scan Device 24
Figure 9.4. Radiant Programmer – Device Detected 25
Figure 9.5. Radiant Programmer – Device Properties 26
Figure 10.1. MIPI Camera Sensor Interface 35
Figure 10.2. MIPI Camera Sensor Power Supply Header 36
Figure 10.3. Circuit Design for ADC0 37
Figure 10.4. Circuit Design for ADC1 37
Figure 10.5. Trimmer Wiper Description 37
Figure 11.1. Four-Position DIP Switch Circuits 39
Figure 11.2. Four-position DIP Switch 39
Figure 11.3. Seven-Segment Display and its Symbol 40

Figure A. 1. Title Page 44
Figure A. 2. Block Diagram and Power Tree 45
Figure A. 3. USB to Hard JTAG I/F 46
Figure A. 4. USB to Soft JTAG I/F (BANK1) 47
Figure A. 5. Versa Connector (BANK0/2) 48
Figure A. 6. Arduino&Aardvark Header (BANK3/4) 49
Figure A. 7. High Speed Header (BANK5/6) 50
Figure A. 8. Raspberry Pi and LEDs (BANK7/8) 51
Figure A. 9. HyperRam and ADC (BANK9) 52
Figure A. 10. Power Rails 53
Figure A. 11. Power Regulators 54

© 2022 Lattice Semiconductor Corp. All Lattice trademarks, registered trademarks, patents, and disclaimers are as listed at www.latticesemi.com/legal.
All other brand or product names are trademarks or registered trademarks of their respective holders. The specifications and information herein are subject to change without notice.

Tables

Table 2.1. Onboard Major Power Rails 11
Table 2.2. MachXO5-25 IO Bank Power Rails Stuff 11
Table 2.3. MachXO5-25 Major Power Rails Stuff 11
Table 3.1. Config JTAG Connections 13
Table 3.2. Other Config JTAG Control Signals 14
Table 3.3. Download I^2C Connections 14
Table 4.1. Soft JTAG Connections 15
Table 4.2. Soft UART Connections 16
Table 5.1. Input Clock Options 17
Table 6.1. SGMII Ethernet PHY Connections 18
Table 7.1. HyperRAM Pin Mapping 20
Table 10.1. Versa J8 Header Pin Connections 27
Table 10.2. Versa J9 Header Pin Connections 28
Table 10.3. Arduino J2 Pin Connections 29
Table 10.4. Arduino J3 Pin Connections 29
Table 10.5. Arduino J4 Pin Connections 30
Table 10.6. Arduino J5 Pin Connections 30
Table 10.7. FX12 U4 Header Pin Connections 30
Table 10.8. FX12 U5 Header Pin Connections 31
Table 10.9. Aardvark J7 Header Pin Connections 32
Table 10.10. Raspberry Pi J6 Header Pin Connections 33
Table 10.11. J15 Header Pin Connections 34
Table 10.12. J16 Header Pin Connections 34
Table 10.13. MIPI Camera Sensor Interconnections 35
Table 10.14. I^2C Connections 36
Table 10.15. J28 (DNI) Header Pin Connections 38
Table 10.16. Test Point Connections 38
Table 11.1. Four-Position DIP Switch Signals 39
Table 11.2. Push Button Switch Signals 40
Table 11.3. LED Signals 40
Table 11.4. Seven-segment Display Connections 41
Table 14.1 Ordering Information 42

© 2022 Lattice Semiconductor Corp. All Lattice trademarks, registered trademarks, patents, and disclaimers are as listed at www.latticesemi.com/legal.
All other brand or product names are trademarks or registered trademarks of their respective holders. The specifications and information herein are subject to change without notice.

Acronyms in This Document

A list of acronyms used in this document.

Acronym	Definition
CMOS	Complementary Metal-Oxide Semiconductor
DNI	Do Not Install
FTDI	Future Technology Devices International
GPIO	General Purpose Input/Output
I^2C	Inter-Integrated Circuit
LDO	Low Dropout
LVDS	Low-Voltage Differential Signaling
SPI	Serial Peripheral Interface

© 2022 Lattice Semiconductor Corp. All Lattice trademarks, registered trademarks, patents, and disclaimers are as listed at www.latticesemi.com/legal.
All other brand or product names are trademarks or registered trademarks of their respective holders. The specifications and information herein are subject to change without notice.

1. Introduction

The Lattice Semiconductor MachXO5™-NX Development Board allows you to investigate and experiment with the features of the MachXO5-25 device. The features of the MachXO5-NX Development Board can assist you with the rapid prototyping and testing of their specific designs.

The MachXO5-NX Development Board is part of the MachXO5-NX Development Kit, which includes the following:

- MachXO5-NX Development Board pre-loaded with the demo design
- 12 V AC/DC Power adapter
- Mini USB cable
- Quick Start Guide

The contents of this user guide include top-level functional descriptions of the various portions of the development board, descriptions of the onboard headers, diodes and switches, and a complete set of schematics.

1.1. MachXO5-NX Development Board

Along with the MachXO5-25 device, the MachXO5-NX Development Board also includes features to expand the usability of the MachXO5-25 with Arduino, Raspberry, FX12, Versa, and Aardvark headers.

Figure 1.1 shows the top view of the MachXO5-NX Development Board.

Figure 1.2 shows the bottom view of this board.

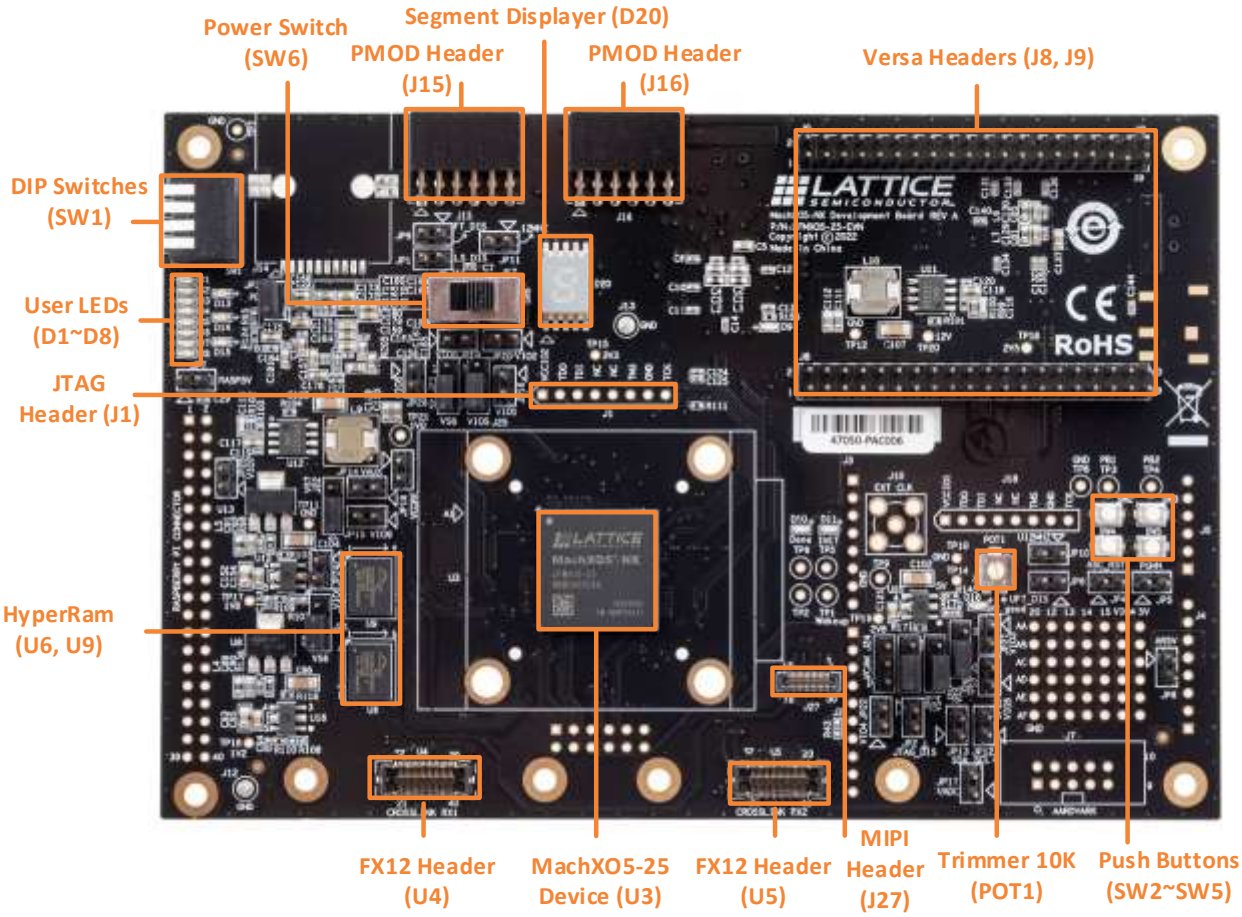

Figure 1.1. Top View of MachXO5-NX Development Board

© 2022 Lattice Semiconductor Corp. All Lattice trademarks, registered trademarks, patents, and disclaimers are as listed at www.latticesemi.com/legal.
All other brand or product names are trademarks or registered trademarks of their respective holders. The specifications and information herein are subject to change without notice.

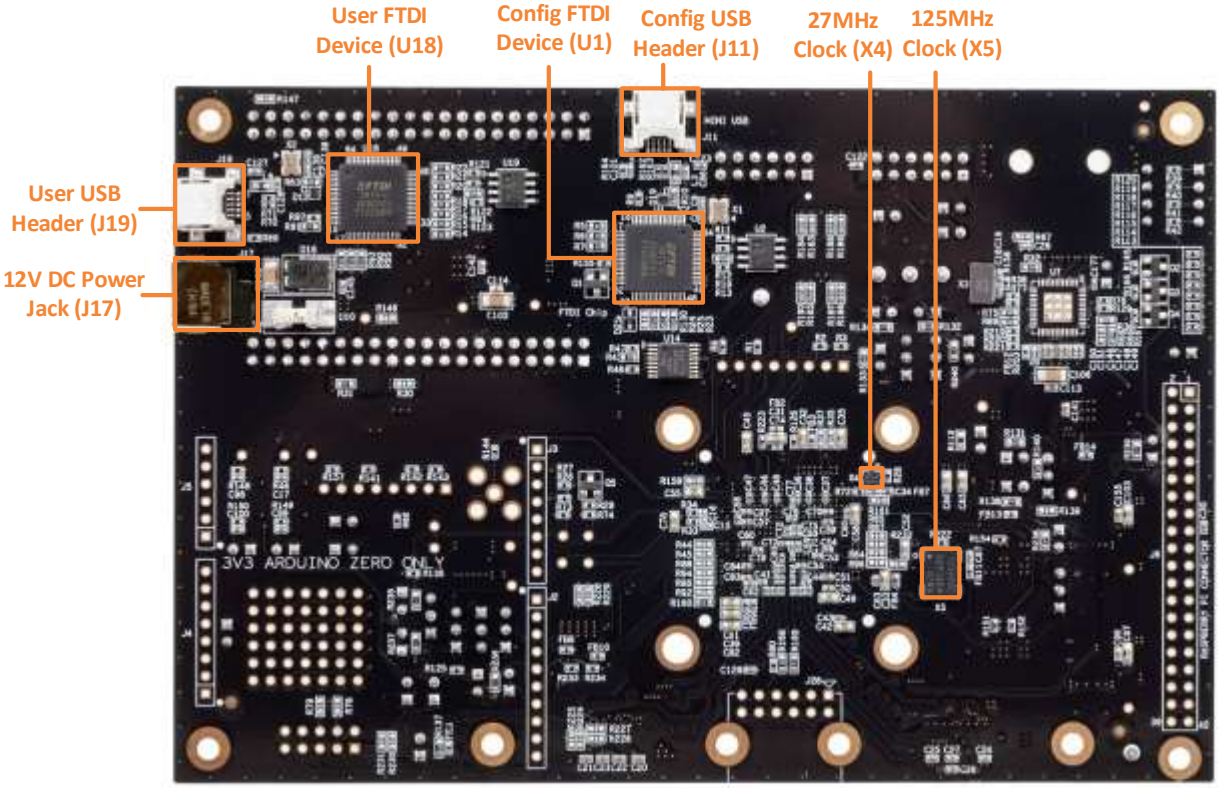

Figure 1.2. Bottom View of MachXO5-NX Development Board

1.2. Features

- On board MachXO5-25 Device
- Optional SGMII, Gbe PHY RJ45 connector (Check Appendix D for the board revision information)
- HyperRAM upto 166MHz, x16 bits
- Versa Headers bridge with Lattice ASC Demo Board to support L-ASC10
- General Purpose Input/Output (GPIO) interface with PMOD, Arduino and Raspberry Pi boards
- USB-B connection for device programming with JTAG and Inter-Integrated Circuit (I^2C) utility
- Additional USB-B connection for user with Soft JTAG and UART utility
- 7-Segment Blue LED, 4-position DIP Switches, 4 push buttons, and 8 red LEDs for demo purposes
- ADC interface with 10K POT
- Two Hirose FX12-40 headers
- Multiple reference clock sources
- Optional Aardvark header
- Lattice Radiant® programming support

Note: DNI stands for "Do NOT Install" parts and DI stands for "Do Install" parts for assembly.

Caution: The MachXO5-NX Development Board contains ESD-sensitive components. ESD safe practices should be followed while handling and using the development board.

© 2022 Lattice Semiconductor Corp. All Lattice trademarks, registered trademarks, patents, and disclaimers are as listed at www.latticesemi.com/legal.
All other brand or product names are trademarks or registered trademarks of their respective holders. The specifications and information herein are subject to change without notice.

1.3. MachXO5-25 Device

The MachXO5-NX Development Board features the MachXO5-25 in a 400-ball caBGA package. This device offers a variety of features and programmability that enhances Secure Control PLD functionality with Multiple Boot capabilities. Its cryptographic engine supports user-mode security features. Along with the cryptographic engine, numerous system functions are included such as two PLLs and 432 kbits of embedded RAM plus hardened implementations of I^2C and SPI. Flexible, high performance I/O support numerous single-ended and differential standards including LVDS and MIPI. For more information on the capabilities of MachXO5-25 device, see MachXO5-NX Family Data Sheet (FPGA-DS-02102).

© 2022 Lattice Semiconductor Corp. All Lattice trademarks, registered trademarks, patents, and disclaimers are as listed at www.latticesemi.com/legal.
All other brand or product names are trademarks or registered trademarks of their respective holders. The specifications and information herein are subject to change without notice.

2. Applying Power to the Board

The MachXO5-NX Development Board comes ready to power up with onboard DC/DC switching regulators and Low Dropout (LDO) generators powered by an external 12 V DC power source. The external power supply can be connected with the DC power input jack J17, which is fused with a surface mounted fuse U10. The 1.25A fuse prevents the crashed current from flowing into the internal circuits and cause serious damage. 12 V DC power also supply Arduino Header J4 and FX12 headers U4/U5 for the board extension, as shown in Figure 2.1.

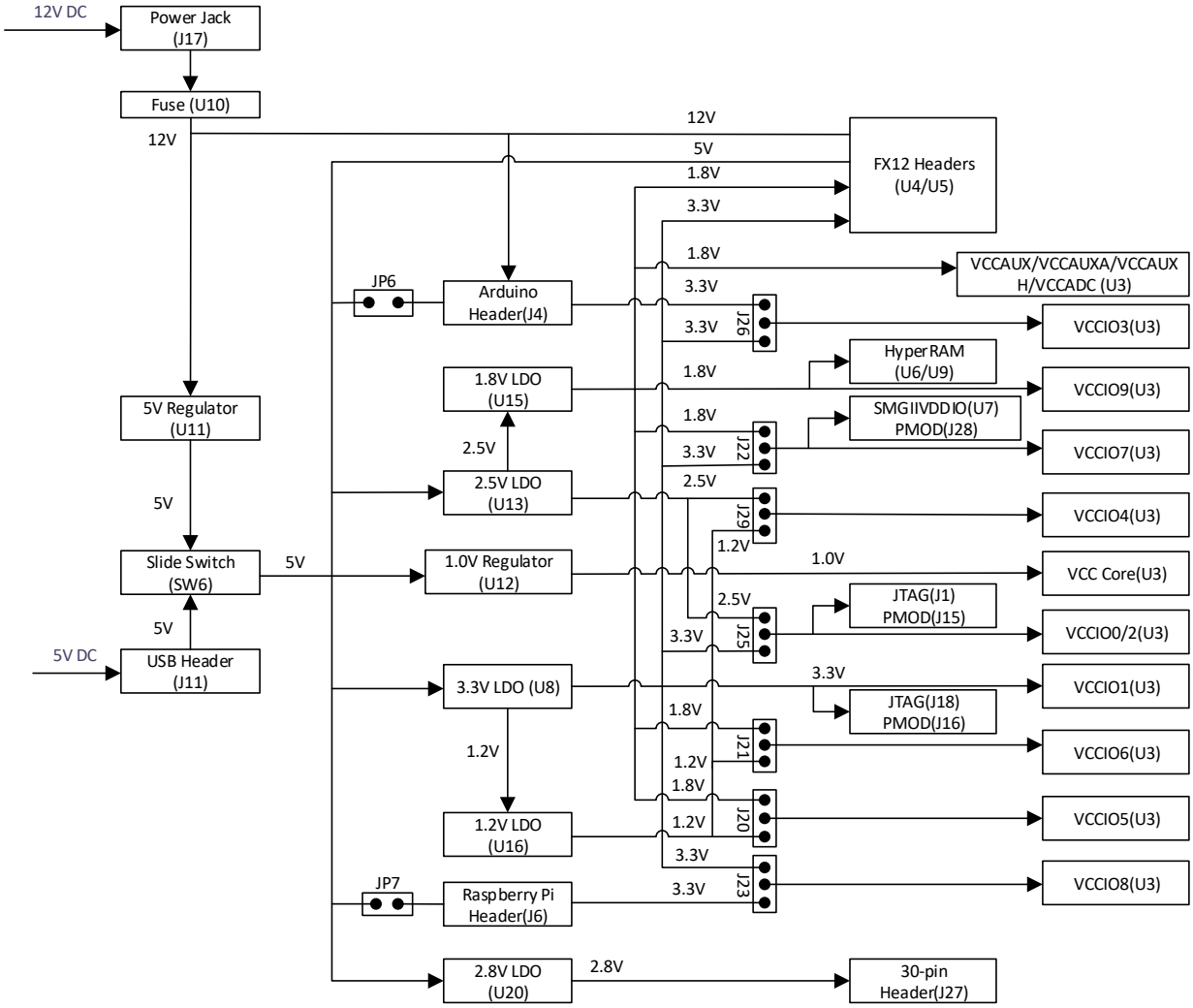

Figure 2.1. Board Power Supply

The onboard 5 V power regulator U11 provide 90% power convert efficiency from 12 V when output current between 50 mA and 3 A. It is distributed to 3.3 V, 2.8 V, 2.5 V LDOs and 1.0 V regulator through one side of slide switch SW6 to support onboard devices. Through another side of SW6, this board can also take the 5 V power from USB header J11 as well, for some low power application. It is user's responsibility to ensure all 5 V power rails on board consume less than 500mA per PC's USB port output capability when take power from J11.

For the board extension, 5 V DC power can also supply FX12 adapter, Raspberry Pi and Arduino boards through the jumpers and onboard headers, to consolidate AC/DC adapters for stack boards system. Conversely, 5V DC power can be either supplied from mated boards with correct jumper settings. However, maintain the 5 V DC power is the basic requirement to bring up this board, by quick check the power good blue LED D18.

The onboard 1.2 V and 1.8 V LDOs take the power from 3.3 V and 2.5 V LDO correspondently.

Table 2.1 summarizes onboard major power rails and their test points.

© 2022 Lattice Semiconductor Corp. All Lattice trademarks, registered trademarks, patents, and disclaimers are as listed at www.latticesemi.com/legal.
All other brand or product names are trademarks or registered trademarks of their respective holders. The specifications and information herein are subject to change without notice.

Table 2.1. Onboard Major Power Rails

Power Net Name	Primary Source	Test Point
+12V	DC Power Jack (J17)	TP20
PS_5V	DC/DC Regulator (U11)	—
VBUS_5V	Mini-USB (J11)	—
+5.0V	Selected by Slide switch (SW6)	TP14
+3.3V	LDO (U8)	TP15
+1.2V	LDO (U16)	TP18
+2.5V	LDO (U13)	TP16
+1.8V	LDO (U15)	TP17
+2.8V	LDO (U20)	TP19
+1.0V	DC/DC Regulator (U12)	TP21
+3.3V_RASP	Raspberry Pi Header (J6)	—
+3.3V_AR	Arduino Header (J4)	—

As shown in Figure 2.1, this board provides multiple power options for I/O bank voltage flexibility. Table 2.2 summarizes the VCCIO support matrix on this board. For an example, VCCIO0 and VCCIO2 share the same three positions jumper J25 and short its Pin 1 and Pin 2 can bring the 3.3 V LDO output to both I/O bank 0 and bank 2. For power consumption evaluation, this board facilitate some two-position jumpers with 1 Ω sense resistors to measure the voltage drop on each power rail, then the supply current can be calculated.

Table 2.2. MachXO5-25 IO Bank Power Rails Stuff

MachXO5-25 Power (U3)	Jumpers	3.3V	2.5V	1.8V	1.2V	Ext 3.3V	Power Test Point	Sense Resistor of 1 Ω
VCCIO0	J25	Pin 1-2	Pin 2-3	—	—	—	JP19	R132
VCCIO1	—	Fixed	—	—	—	—	JP16	R133
VCCIO2	J25	Pin 1-2	Pin 2-3	—	—	—	JP20	R134
VCCIO3	J26	Pin 1-2		—	—	Pin 2-3	JP21	R235
VCCIO4	J29	—	Pin 1-2	—	Pin 2-3	—	JP22	R236
VCCIO5	J20	—	—	Pin 2-3	Pin 1-2	—	JP23	R237
VCCIO6	J21	—	—	Pin 2-3	Pin 1-2	—	JP24	R238
VCCIO7	J22	Pin 1-2	—	Pin 2-3	—	—	JP25	R239
VCCIO8	J23	Pin 1-2	—	—	—	Pin 2-3	JP26	R240
VCCIO9	—	—	—	Fixed	—	—	JP15	R138

Other than power rail for each I/O Bank, this board also provides some test points to evaluate the major power consumptions for MachXO5-25 device.

Table 2.3. MachXO5-25 Major Power Rails Stuff

MachXO5-25 Power (U3)	Power Test Point	Voltage Drop Resistor	Resistance
VCC_CORE	JP18	R112	0.01 Ω
VCC_AUX/VCC_AUXH/VCCAUXA	JP14	R131	1 Ω
VCC_ADC	JP17	R137	1 Ω

© 2022 Lattice Semiconductor Corp. All Lattice trademarks, registered trademarks, patents, and disclaimers are as listed at www.latticesemi.com/legal.
All other brand or product names are trademarks or registered trademarks of their respective holders. The specifications and information herein are subject to change without notice.

3. Hard JTAG/I²C Programming

The hardened JTAG/I²C programming architecture of the MachXO5-NX Development Board is shown in Figure 3.1. The board has a built-in download controller for programming the MachXO5-25 device. It uses an FT2232H Future Technology Devices International (FTDI) part U1 to convert USB to JTAG from port A, or convert USB to I²C from port B. Using Detect Cable function with Radiant programming software installed, you can detect dual ports after power up the board and connect the mini USB to USB-A cable from J11 to your PC ensuring FTDI reset control jumper JP9 is not populated as default. The software select option FTUSB-0 is dedicate for hard JTAG and FTUSB-1 is dedicate for hard I²C which is mapping with port A and port B from hardware perspective, as shown in Figure 3.2.

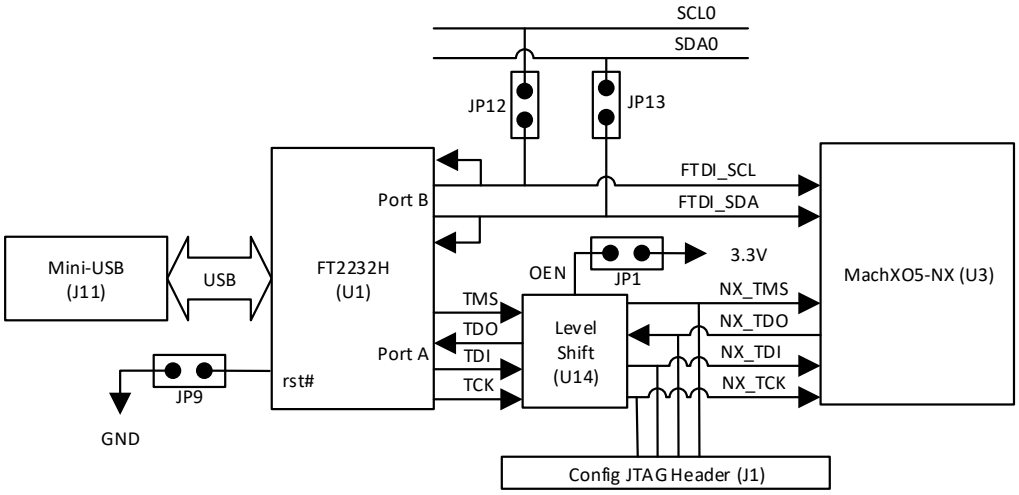

Figure 3.1. JTAG/I²C Programming Architecture

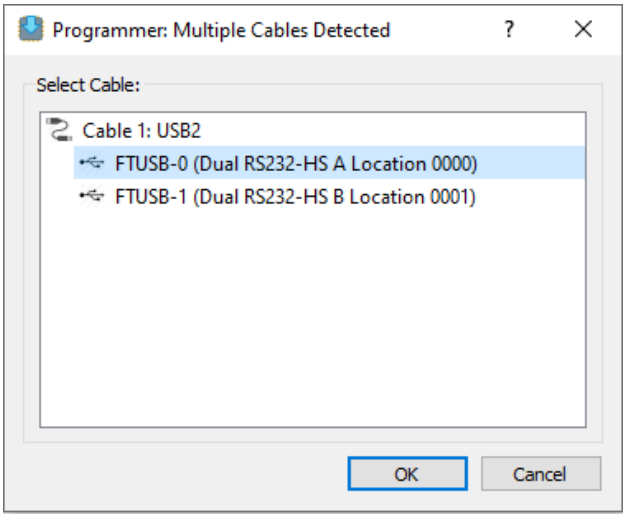

Figure 3.2. Radiant Programmer Detect Dual Ports

3.1. JTAG Download Interface

A level shifter SN74AVC4T774 U14 from TI is inserted between Config FTDI Port A and MachXO5-25 JTAG port to make sure the FTDI fixed I/O voltage can adapt with flexible voltage selection of FPGA's bank 2, as shown in Figure 3.3. An 8-pin header J1 as shown in Figure 3.4 allowing you not only to probe the JTAG signals, but also to access MachXO5-25 JTAG port from external JTAG host such as external Lattice HW-USBN-2B Programming Cable (available separately), or access SSPI port from external SPI host. In those cases, jumper JP1 must be added to pull OEN high and ensure U14 to

© 2022 Lattice Semiconductor Corp. All Lattice trademarks, registered trademarks, patents, and disclaimers are as listed at www.latticesemi.com/legal.
All other brand or product names are trademarks or registered trademarks of their respective holders. The specifications and information herein are subject to change without notice.

output tri-state mode, avoiding multi-drivers on those shared signals. The JTAG connections between J1 and MachXO5-25 are listed in Table 3.1.

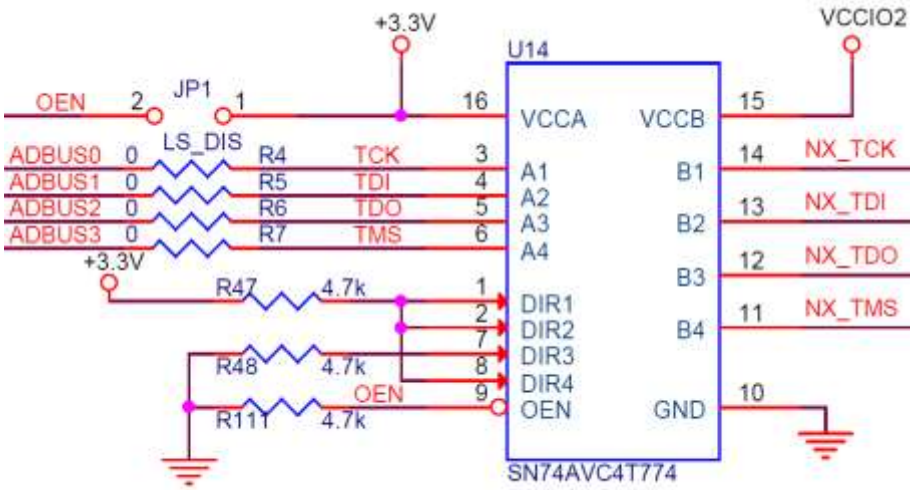

Figure 3.3. Level Shift for JTAG Download Interface

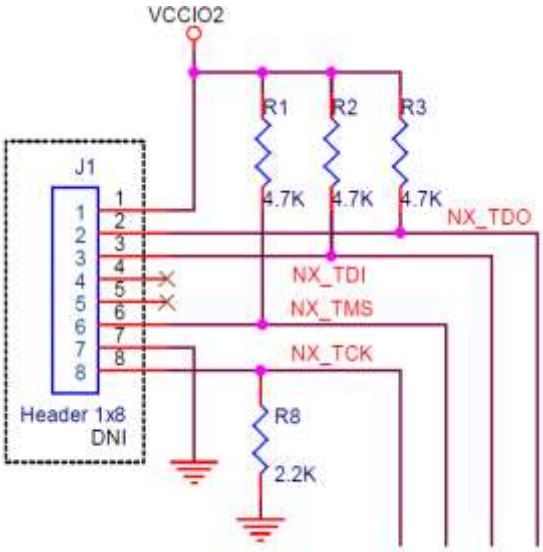

Figure 3.4. JTAG Test Header

Table 3.1. Config JTAG Connections

J1 Pin Number	JTAG Net Name	MachXO5-25 Ball Location for JTAG	Optional SSPI Function
1	VCCIO2	—	—
2	NX_TDO	E20	SSI
3	NX_TDI	E18	SSO
4	—	—	—
5	—	—	—
6	NX_TMS	F16	SCSN
7	GND	—	—
8	NX_TCK	G16	SCLK

© 2022 Lattice Semiconductor Corp. All Lattice trademarks, registered trademarks, patents, and disclaimers are as listed at www.latticesemi.com/legal.
All other brand or product names are trademarks or registered trademarks of their respective holders. The specifications and information herein are subject to change without notice.

The MachXO5-NX Development Board also provides test points for other dedicated JTAG configuration pins as shown in Table 3.2.

Table 3.2. Other Config JTAG Control Signals

Net Name	MachXO5-25 Ball Location	LED Indicator	Test Point
JTAGEN	B20	—	Pin 1 of JP2
PROGRAMN	F12	—	Pin 1 of JP5
INITN	E13	D11	TP5
DONE	F13	D10	TP6

JP2 for JTAGEN is used to pull down the JTAGEN for enabling JTAG port when JTAG_PORT is disabled by software. JP5 can bridge push button PB4 with PROGRAMN when PROGRAMN_PORT function is enabled by software.

3.2. I²C Download Interface

The USB hub on the PC can also detect the addition of the USB function on Config FTDI Port B and you can select the port FTUSB-1 on the programmer interface for the accessing from Config FTDI Port B to the MachXO5-25 dedicated I²C download port (Figure 3.2) that is named as FTDI_SDA/FTDI_SCL with 2.2 kΩ pull up resistor each. The Diode D21 is inserted to support I²C clock stretching mode. Figure 3.5 details the design of Config FTDI Port B for dedicated I²C download interface. Table 3.3 summarizes the interconnection with MachXO5-25 and its supported circuits. JP12 and JP13 are used to connect the dedicated I²C download port of MachXO5-25 with the bridge I²C bus SDA0/SCL0 cross the whole board, in case you need access I²C download port from other on board headers other than Config FTDI part. For the detail connection from other headers to bridge I²C bus SDA0/SCL0, refer to the User I2C Interface section.

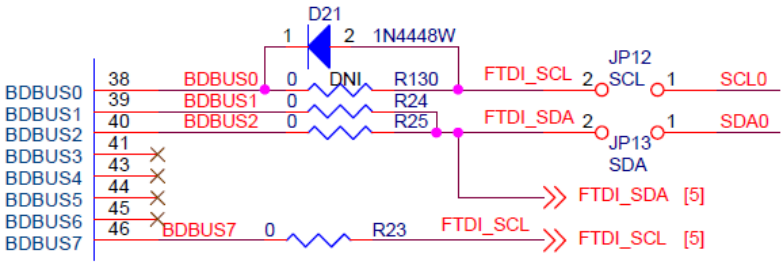

Figure 3.5. I²C Programming Mode

Table 3.3. Download I²C Connections

Download I²C Net Name	MachXO5-25 Ball Location for JTAG	2.2 kΩ Pull up Resistor	Bridge I²C Net Name	Bridge Jumper
FTDI_SCL	G15	R33	SCL0	JP12
FTDI_SDA	F15	R34	SDA0	JP13

For more information on MachXO5-25 JTAG/ I²C programming, refer to MachXO5-NX Programming and Configuration User Guide (FPGA-TN-02271).

© 2022 Lattice Semiconductor Corp. All Lattice trademarks, registered trademarks, patents, and disclaimers are as listed at www.latticesemi.com/legal.
All other brand or product names are trademarks or registered trademarks of their respective holders. The specifications and information herein are subject to change without notice.

4. Soft JTAG/UART User Interface

The soft JTAG/UART user interface for the MachXO5-NX Development Board is shown in Figure 4.1. Supposedly it also uses an FT2232H FTDI part U18 to convert USB to user JTAG from port A, or convert USB to UART from port B. Using Detect Cable function with Radiant programming software installed and ensuring FTDI reset control jumper JP8 is not populated in default, as shown in Figure 3.2, you can detect other dual ports after power up the board. You can then connect the mini USB to USB-A cable from J19 to your PC. The software select option FTUSB-0 is targeted for user JTAG, and FTUSB-1 is targeted for UART that is mapped with port A and port B from hardware perspective.

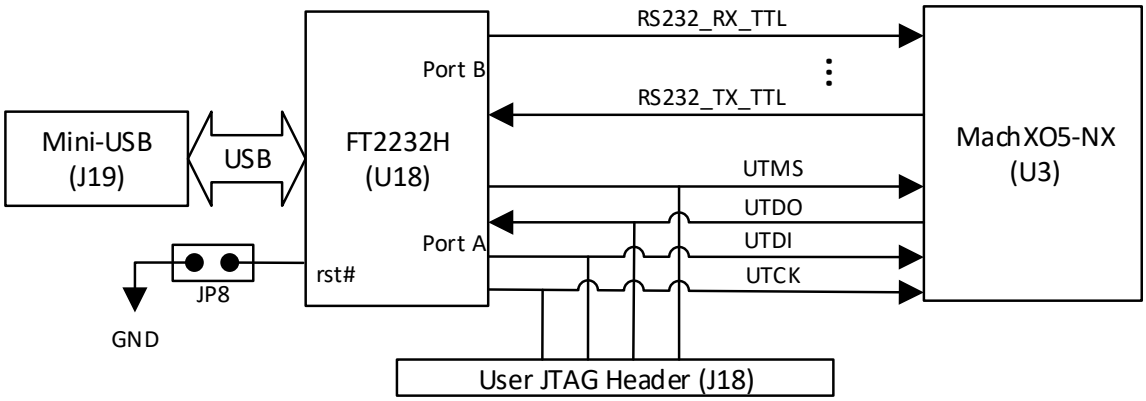

Figure 4.1. JTAG/UART User Interfacing

4.1. Soft JTAG User Interface

User FTDI Port A is connected with GPIOs in Bank 1 directly, but you need allocate GPIOs for adaption with JTAG signals by programmable logic, which is defined by FTDI Port A when converting USB to JTAG through FTUSB-0. J18 is an 8-pin standalone JTAG header that is used with an external Lattice download cable (available separately) when the FTDI part is disabled from the JTAG chain after setting JP8. J18 can also be used as test point when USB to JTAG is working.

Table 4.1. Soft JTAG Connections

J18 Pin Number	FTDI Signal	JTAG Net Name	MachXO5-25 Ball Location
1	—	VCCIO1	—
2	UADBUS2	UTDO	A12
3	UADBUS1	UTDI	A11
4	—	—	—
5	—	—	—
6	UADBUS3	UTMS	A13
7	—	GND	—
8	UADBUS0	UTCK	A14

4.2. Soft UART User Interface

User FTDI Port B is also connected with GPIOs in Bank 1 directly, but you need allocate GPIOs for adaption with UART signals by programmable logic, which is defined by FTDI Port B when converting USB to UART through FTUSB-1.

© 2022 Lattice Semiconductor Corp. All Lattice trademarks, registered trademarks, patents, and disclaimers are as listed at www.latticesemi.com/legal.
All other brand or product names are trademarks or registered trademarks of their respective holders. The specifications and information herein are subject to change without notice.

Table 4.2. Soft UART Connections

FTDI Signal	UART Net Name	MachXO5-25 Ball Location for Port A
UBDBUS0	RS232_RX_TTL	B11
UBDBUS1	RS232_TX_TTL	B12
UBDBUS2	RTSn	B13
UBDBUS3	CTSn	B14
UBDBUS4	DTRn	B15
UBDBUS5	DSRn	B16
UBDBUS6	DCDn	B17
UBDBUS7	RI	C11

© 2022 Lattice Semiconductor Corp. All Lattice trademarks, registered trademarks, patents, and disclaimers are as listed at www.latticesemi.com/legal.
All other brand or product names are trademarks or registered trademarks of their respective holders. The specifications and information herein are subject to change without notice.

5. MachXO5-25 Clock Sources

The MachXO5-NX Development Board has multiple external clock options for the MachXO5-25 applications as shown in Figure 5.1.

- 12 MHz from U1 (FTDI)
- 12 MHz from U18 (FTDI)
- 25 MHz from U7 (SGMII PHY)
- 27 MHz from X4 (OSC MEM)
- 125 MHz from X5 (OSC MEM)
- External clock source from J10 (SMA)

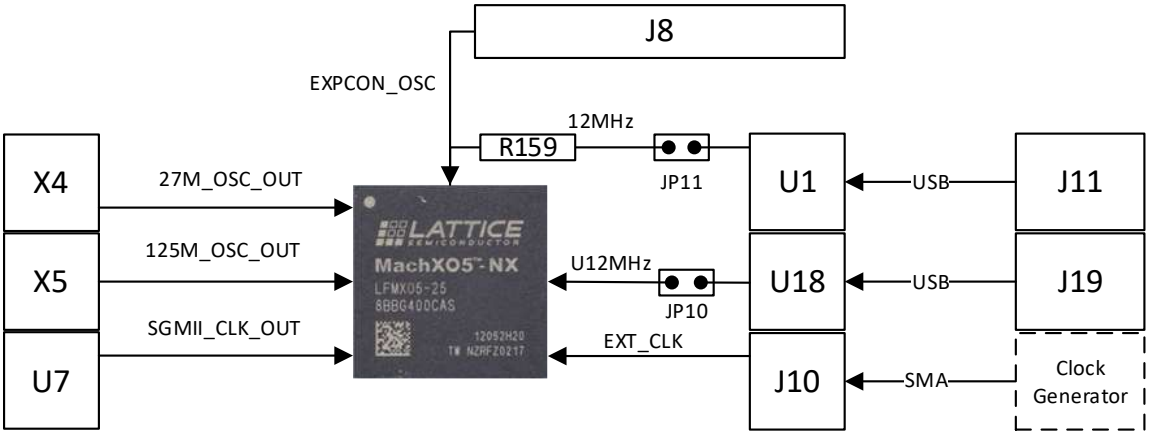

Figure 5.1. Onboard Clock Resources

You need take care that only 27 MHz and 125 MHz clocks are active in default after board power up. Both 12 MHz clocks from the FT2232H FTDI U1 and U18 device are not always on without some hardware configuration. 25 MHz of SGMII and external clock need source from other devices. Refer to Table 5.1 for those clock utilization and enable conditions.

Table 5.1. Input Clock Options

Clock Frequency	Net Name	MachXO5-25 Ball Location	Clock Source	Always On?	Enable Conditions
12 MHz	12MHZ	E16	U1	No	Need add R159 and JP11. USB header J11 connected with power on.
12 MHz	U12MHZ	E14	U18	No	Need add JP10. USB header J19 connected with power on.
25 MHz	SGMII_CLK_OUT	T7	U7	No	Power on. U7 populated and enabled.
27 MHz	27M_OSC	B1	X4	Yes	Power on. Force 27M_EN high if R161 populated.
125 MHz	125M_OSC	V1	X5	Yes	Power on. Force 125M_EN high if R232 populated.
Customer	EXT_CLK	D19	J10	No	Need add J10. Connect to external clock generator through SMA cable.

© 2022 Lattice Semiconductor Corp. All Lattice trademarks, registered trademarks, patents, and disclaimers are as listed at www.latticesemi.com/legal.
All other brand or product names are trademarks or registered trademarks of their respective holders. The specifications and information herein are subject to change without notice.

6. SGMII Ethernet Connections

This section describes the MachXO5-NX Development Board SGMII application for Ethernet connections.

Table 6.1. SGMII Ethernet PHY Connections

U7 Pin Number	U7 Signal Name	Net Name	MachXO5-25 Ball Location	Application Notes
1	TD_P_A	SGMII_MD0_P	—	To RJ45
2	TD_M_A	SGMII_MD0_N	—	To RJ45
3	VDDA2P5	+2.5V	—	2.5 V Power
4	TD_P_B	SGMII_MD1_P	—	To RJ45
5	TD_M_B	SGMII_MD1_N	—	To RJ45
6	VDD1P0	VCCA_1V_PHY	—	1.0 V Power
7	TD_P_C	SGMII_MD2_P	—	To RJ45
8	TD_M_C	SGMII_MD2_N	—	To RJ45
9	VDDA2P5	+2.5V	—	2.5 V Power
10	TD_P_D	SGMII_MD3_P	—	To RJ45
11	TD_M_D	SGMII_MD3_P	—	To RJ45
12	RBIAS	—	—	Pull down to GND
13	VDDA1P8	SGMII_PHY_D1V8	—	1.8 V Power
14	XO	SGMII_XO	—	25 MHz Crystal Output
15	XI	SGMII_XI	—	25 MHz Crystal Input
16	MDC	SGMII_MDIO_CLK	U1	Optional pull up to VDDIO
17	MDIO	SGMII_MDIO_DATA	U2	Pull up to VDDIO
18	CLK_OUT	SGMII_CLK_OUT	T7	With 22 Ω debounce resistor
19	VDDIO	SGMII_VDDIO	—	VCCIO7 selectable
20	JTAG_CLK	—	—	Pull down to GND
21	JTAG_TDO	—	—	Pull up to VDDIO
22	JTAG_TMS	—	—	Pull up to VDDIO
23	JTAG_TDI	—	—	Pull up to VDDIO
24	VDD1P0	VCCA_1V_PHY	—	1.0 V Power
25	TX_D3	—	—	Pull down to GND
26	TX_D2	—	—	Pull down to GND
27	TX_D1/SGMII_SIP	SGMII_PHY_SIP	N8	0.1 µF AC coupling
28	TX_D0/SGMII_SIN	SGMII_PHY_SIN	P8	0.1 µF AC coupling
29	GTX_CLK	—	—	Pull down to GND
30	VDDIO	SGMII_VDDIO	—	VCCIO7 selectable
31	VDD1P0	VCCA_1V_PHY	—	1.0 V Power
32	RX_CLK	—	—	—
33	RX_D0/SGMII_COP	SGMII_PHY_COP	U9	0.1 µF AC coupling
34	RX_D1/SGMII_CON	SGMII_PHY_CON	V9	0.1 µF AC coupling
35	RX_D2/SGMII_SOP	SGMII_PHY_SOP	N9	0.1 µF AC coupling
36	RX_D3/SGMII_SON	SGMII_PHY_SON	P9	0.1 µF AC coupling
37	TX_CTRL	—	—	Pull down to GND
38	RX_CTRL	—	—	—
39	GPIO_0	—	—	Pull down to GND
40	GPIO_1	—	—	Pull down to GND
41	VDDIO	SGMII_VDDIO	—	VCCIO7 selectable
42	VDD1P0	VCCA_1V_PHY	—	1.0 V Power

© 2022 Lattice Semiconductor Corp. All Lattice trademarks, registered trademarks, patents, and disclaimers are as listed at www.latticesemi.com/legal.
All other brand or product names are trademarks or registered trademarks of their respective holders. The specifications and information herein are subject to change without notice.

U7 Pin Number	U7 Signal Name	Net Name	MachXO5-25 Ball Location	Application Notes
43	RESET#	SGMII_RST_N	T6	Default Pull down
44	INT/PWDN	SGMII_INT	T5	Default pull up. Shunt JP3 to pull down.
45	LED_2	SGMII_LED_2	—	Drive Red LED D15
46	LED_1	SGMII_LED_1	—	Drive Red LED D14
47	LED_0	SGMII_LED_0	—	Drive Red LED D13
48	VDDA1P8	SGMII_PHY_D1V8	—	1.8 V Power

© 2022 Lattice Semiconductor Corp. All Lattice trademarks, registered trademarks, patents, and disclaimers are as listed at www.latticesemi.com/legal.
All other brand or product names are trademarks or registered trademarks of their respective holders. The specifications and information herein are subject to change without notice.

7. HyperRAM

This section describes MachXO5-25 interconnection with 2 HyperRAM device on MachXO5-NX Development Board.

Table 7.1. HyperRAM Pin Mapping

Cypress HyperRAM™ in 24-Ball FBGA		Connection for HyperRAM0 (U6)		Connection for HyperRAM1 (U9)	
Symbol Name	**Ball Location**	**Net Name**	**MachXO5-25 Ball Location**	**Net Name**	**MachXO5-25 Ball Location**
RFU1	A2	—	—	—	—
RFU2	A5	—	—	—	—
CS#	A3	HR0_CS	J3	HR1_CS	G6
RESET#	A4	HR_RST	D2	HR_RST	D2
CK#	B1	HR0_CKN	J1	HR1_CKN	K4
CK	B2	HR0_CK	J2	HR1_CK	K5
VSS	B3	GND	—	GND	—
VSSQ	C1	GND	—	GND	—
VSSQ	E5	GND	—	GND	—
VCC	B4	VRAM	—	VRAM	—
VCCQ	E4	VRAM	—	VRAM	—
VCCQ	D1	VRAM	—	VRAM	—
RFU3	B5	—	—	—	—
RFU4	C2	—	—	—	—
RFU5	C5	—	—	—	—
RWDS	C3	HR0_RW	D1	HR1_RW	G5
DQ0	D3	HR0_DQ0	H1	HR1_DQ0	E1
DQ1	D2	HR0_DQ1	H2	HR1_DQ1	E2
DQ2	C4	HR0_DQ2	J4	HR1_DQ2	E3
DQ3	D4	HR0_DQ3	J5	HR1_DQ3	F1
DQ4	D5	HR0_DQ4	J6	HR1_DQ4	G1
DQ5	E3	HR0_DQ5	J7	HR1_DQ5	G2
DQ6	E2	HR0_DQ6	J8	HR1_DQ6	G3
DQ7	E1	HR0_DQ7	K8	HR1_DQ7	G4

© 2022 Lattice Semiconductor Corp. All Lattice trademarks, registered trademarks, patents, and disclaimers are as listed at www.latticesemi.com/legal.
All other brand or product names are trademarks or registered trademarks of their respective holders. The specifications and information herein are subject to change without notice.

8. Generating the Programming File

The demo project on the MachXO5-NX Development Board Rev A board can be downloaded from the Lattice website (https://www.latticesemi.com/products/developmentboardsandkits/ machxo5-nx-development-board).

To generate the JEDEC (.jed) file:

1. Open the Radiant software.
2. From the **File** menu, choose **Open > Project**.
3. In the **Open Project** dialog box, select the *test.rdf* file and click **Open**, as shown in Figure 8.1. This opens the demo project.

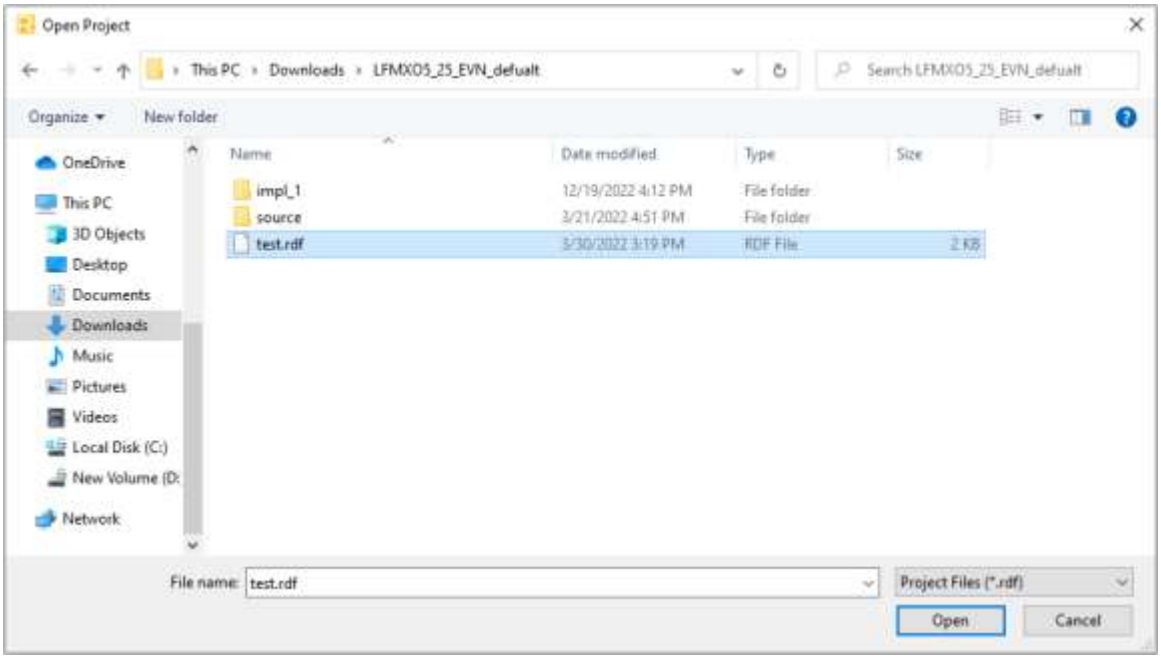

Figure 8.1. Radiant Software – Open Project Dialog Box

© 2022 Lattice Semiconductor Corp. All Lattice trademarks, registered trademarks, patents, and disclaimers are as listed at www.latticesemi.com/legal.
All other brand or product names are trademarks or registered trademarks of their respective holders. The specifications and information herein are subject to change without notice.

4. In the **Process Toolbar**, click **Run All** button , as shown in Figure 8.2.

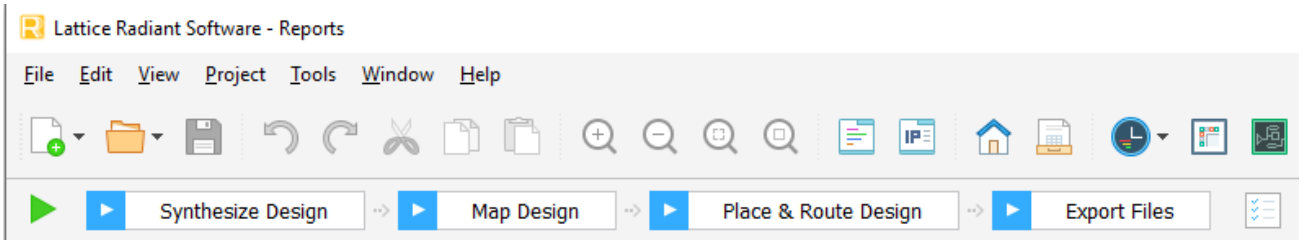

Figure 8.2. Radiant Software – Process Toolbar initial state

Green checkmarks appear on each successfully-completed step, including the generation of the JEDEC file, as shown in Figure 8.3.

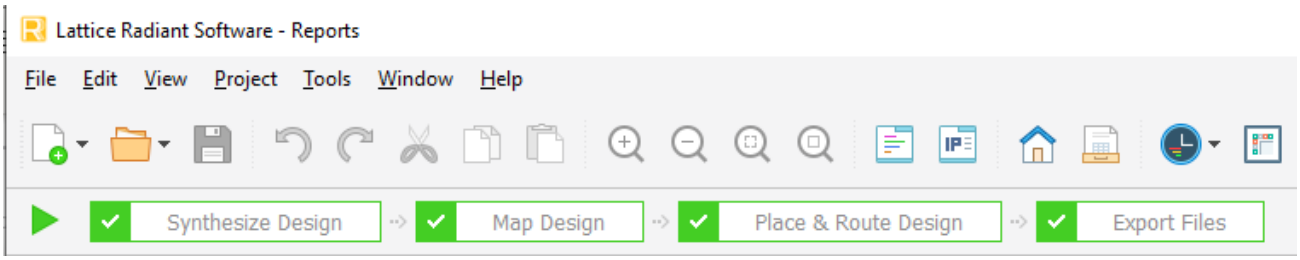

Figure 8.3. Radiant Software –Processes Toolbar completed state

The generated .mcs and *.jed* file are located in the *impl_1* folder.

© 2022 Lattice Semiconductor Corp. All Lattice trademarks, registered trademarks, patents, and disclaimers are as listed at www.latticesemi.com/legal.
All other brand or product names are trademarks or registered trademarks of their respective holders. The specifications and information herein are subject to change without notice.

9. Programming the MachXO5-NX Device

Radiant Programmer can be used to program the JEDEC file to the MachXO5-NX embedded flash after the JEDEC data file is generated, as shown in the Generating the Programming File section. Radiant Programmer is integrated into the Radiant software and is also available as a standalone version.

To program the MachXO5-NX embedded flash:

1. Connect the PC and MachXO5-NX Development Board (J11) using the USB cable.
2. In Radiant Software, click **Tools** > **Programmer**, as shown in Figure 9.1.

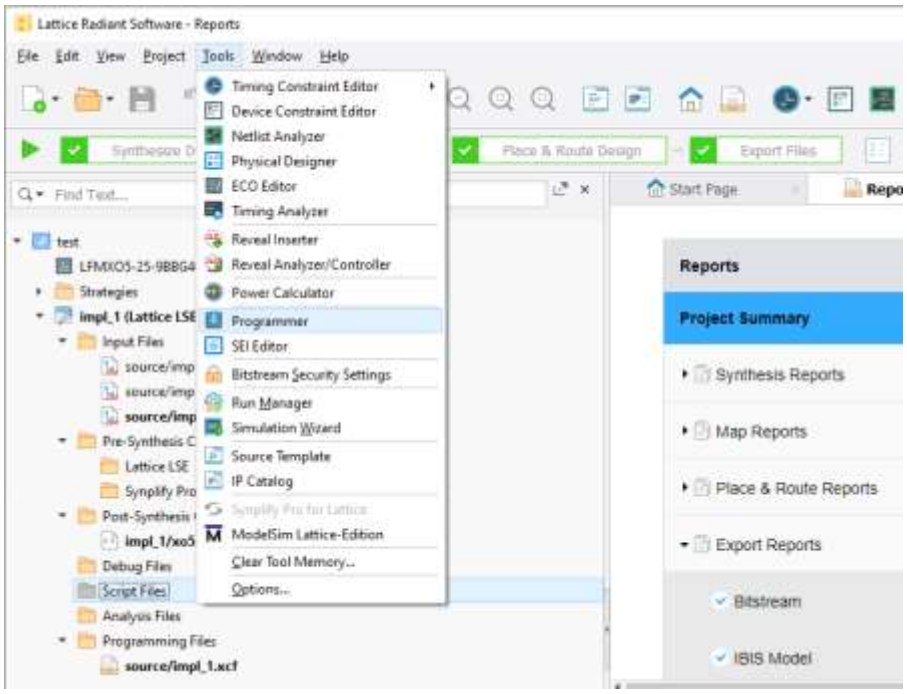

Figure 9.1. Radiant Software – Radiant Programmer

3. After the Radiant Programmer interface opens, as shown in Figure 9.2. power up MachXO5-NX Development Board by correctly positioning power switch **SW6**.

© 2022 Lattice Semiconductor Corp. All Lattice trademarks, registered trademarks, patents, and disclaimers are as listed at www.latticesemi.com/legal.
All other brand or product names are trademarks or registered trademarks of their respective holders. The specifications and information herein are subject to change without notice.

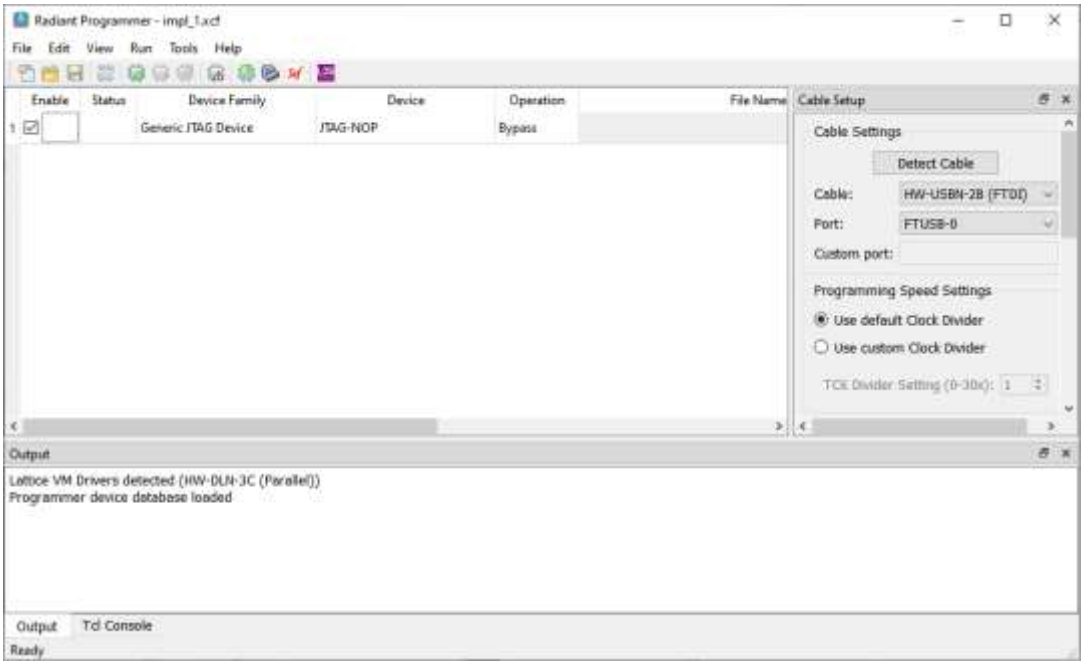

Figure 9.2. Radiant Programmer - Initial Opened

4. Click **Run** > **Scan Device** to check the board through FTUSB-0 Port of embedded HW-USBN-2B(FTDI) cable, as shown in Figure 9.3. The MachXO5-NX device named as LFMXO5-25 should be detected on the JTAG chain as shown in Figure 9.4.

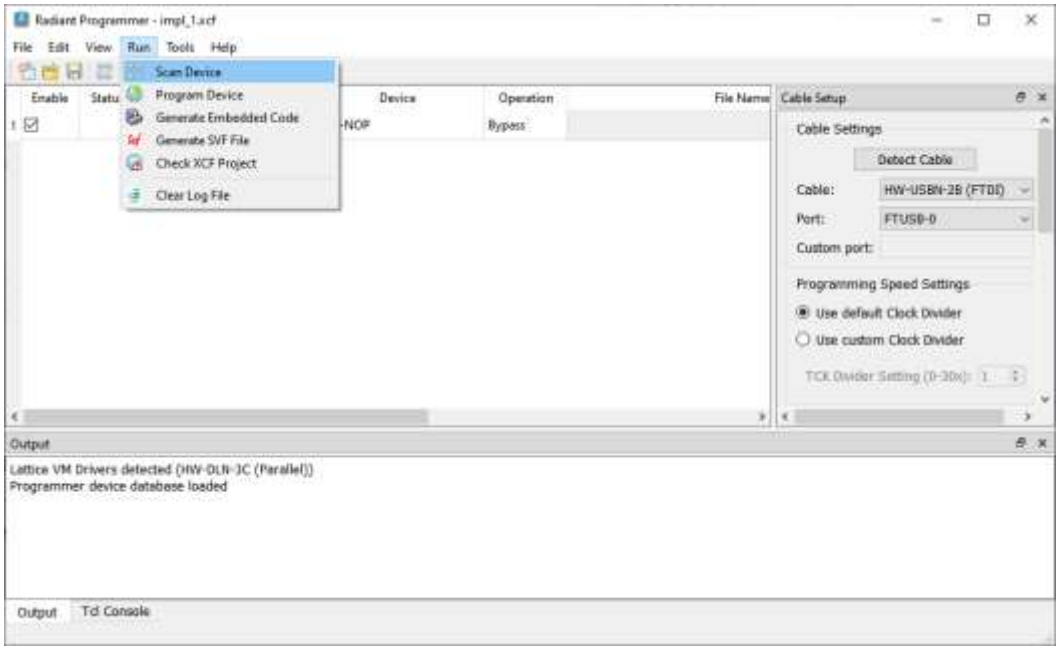

Figure 9.3. Radiant Programmer -Scan Device

5. Change the **Programming Speed Settings** in the **Cable Setup** pane on the right. **Use custom Clock Divider** option to increase the **TCK Divider Setting** to 3 or above, as shown in Figure 9.4.

© 2022 Lattice Semiconductor Corp. All Lattice trademarks, registered trademarks, patents, and disclaimers are as listed at www.latticesemi.com/legal.
All other brand or product names are trademarks or registered trademarks of their respective holders. The specifications and information herein are subject to change without notice.

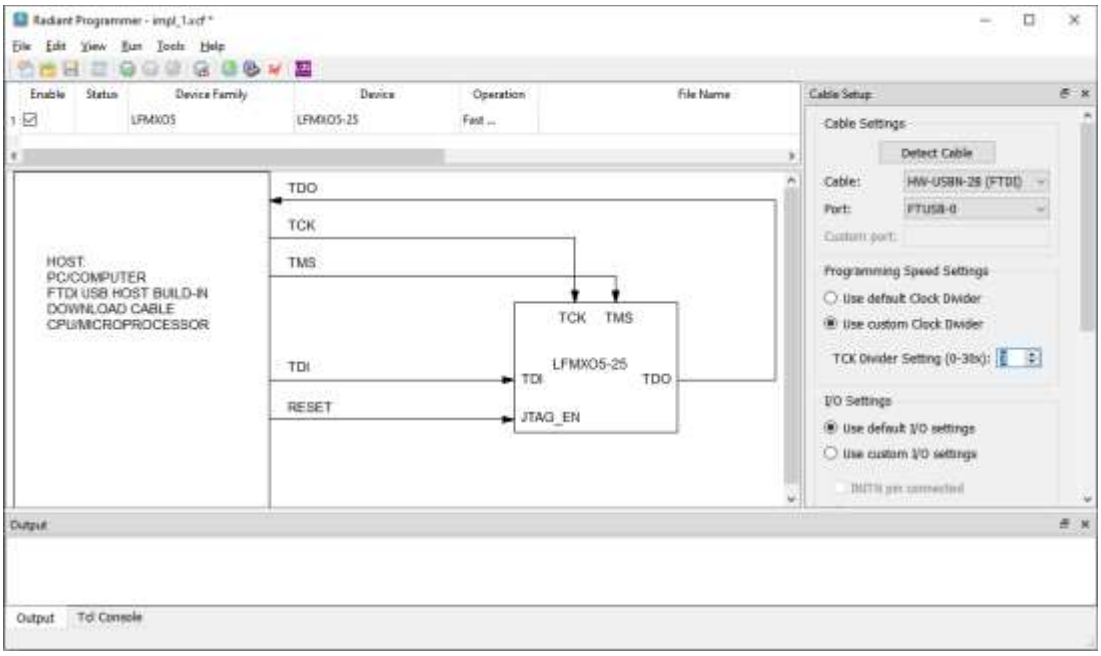

Figure 9.4. Radiant Programmer – Device Detected

6. Open the **Device Properties** dialog box by double click Operation column, as shown in Figure 9.5. Select the following options:

   Access mode – **Flash Configuration Memory Port Interface** – **JTAG**

   Access Mode – **Direct FLASH Programming**

   Operation – **Erase,Program,Verify**

   Flash Header Programming Options should be checked and select .mcs file for **Programming file**.

7. **CFGA Programming Options** should be check and select .jed file for **Programming file**. Click **OK**.

© 2022 Lattice Semiconductor Corp. All Lattice trademarks, registered trademarks, patents, and disclaimers are as listed at www.latticesemi.com/legal.
All other brand or product names are trademarks or registered trademarks of their respective holders. The specifications and information herein are subject to change without notice.

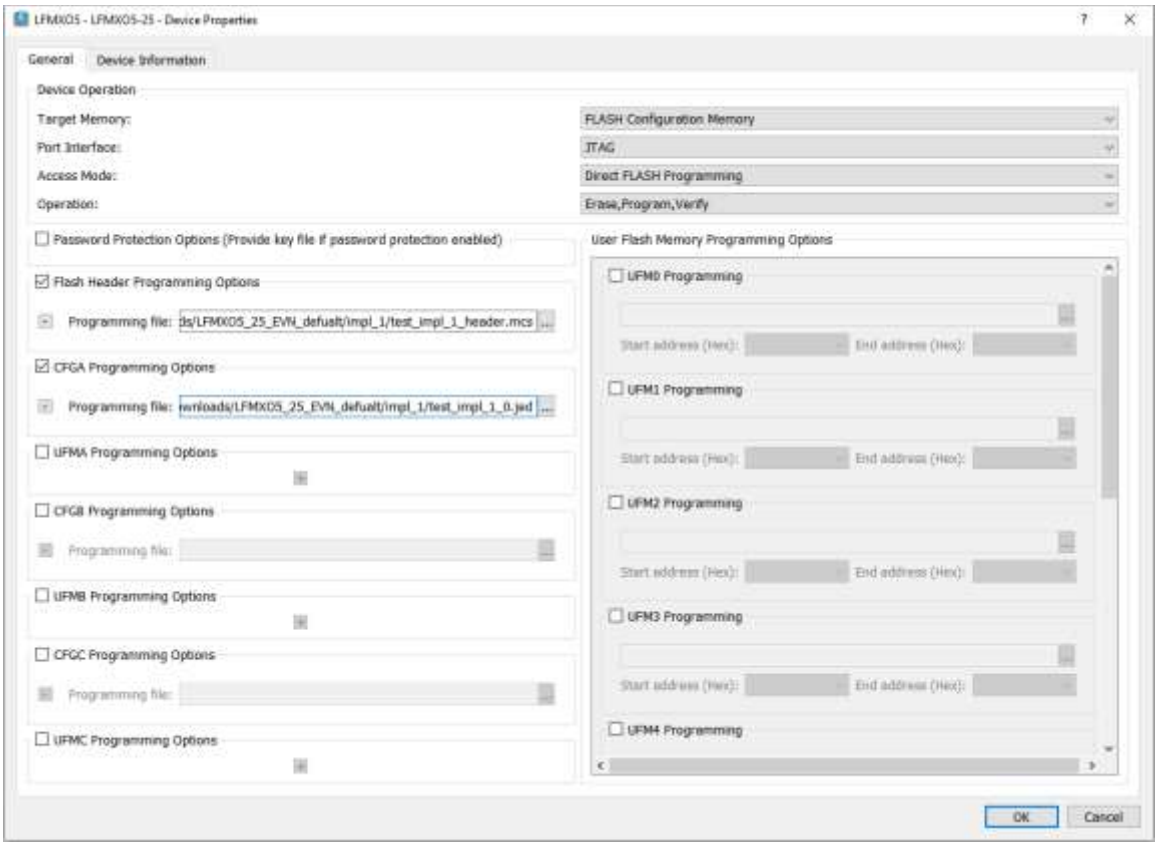

Figure 9.5. Radiant Programmer – Device Properties

8. To program the embedded Flash, click the **Program Device** button in Radiant Programmer.
   If successful, the **Status** column shows **PASS**.
   The Output pane also shows INFO – Operation: successful.

© 2022 Lattice Semiconductor Corp. All Lattice trademarks, registered trademarks, patents, and disclaimers are as listed at www.latticesemi.com/legal.
All other brand or product names are trademarks or registered trademarks of their respective holders. The specifications and information herein are subject to change without notice.

10. Headers and Test Connections

This section describes the MachXO5-NX Development Board headers and test connections.

10.1. Versa Headers

The board provides two headers, J8 and J9, for expansion purpose.

Table 10.1. Versa J8 Header Pin Connections

J8 Pin Number	Net Name	MachXO5-25 Ball Location
1	GND	—
2	NC	—
3	EXPCON_2V5*	—
4	EXPCON_IO29	C20
5	EXPCON_IO30	H14
6	EXPCON_IO31	G14
7	EXPCON_IO32	H15
8	EXPCON_IO33	G18
9	EXPCON_IO34	H16
10	EXPCON_IO35	G19
11	EXPCON_IO36	H20
12	EXPCON_IO37	H19
13	EXPCON_IO38	J17
14	EXPCON_IO39	J18
15	EXPCON_IO40	J15
16	EXPCON_IO41	J16
17	EXPCON_IO42	J13
18	EXPCON_IO43	J14
19	EXPCON_IO44	J12
20	EXPCON_IO45	H13
21	5VIN*	—
22	GND	—
23	EXPCON_2V5*	—
24	GND	—
25	+3.3V	—
26	GND	—
27	+3.3V	—
28	GND	—
29	EXPCON_OSC	E16
30	GND	—
31	EXPCON_CLKIN	E17
32	GND	—
33	EXPCON_CLKOUT	D20
34	GND	—
35	EXPCON_3V3**	—
36	GND	—

© 2022 Lattice Semiconductor Corp. All Lattice trademarks, registered trademarks, patents, and disclaimers are as listed at www.latticesemi.com/legal.
All other brand or product names are trademarks or registered trademarks of their respective holders. The specifications and information herein are subject to change without notice.

J8 Pin Number	Net Name	MachXO5-25 Ball Location
37	EXPCON_3V3**	—
38	GND	—
39	EXPCON_3V3**	—
40	GND	—

Notes:

* Net is optionally connected to power source through resistor DNI.

** Net is optionally connected to power source through resistor DI.

Table 10.2. Versa J9 Header Pin Connections

J9 Pin Number	Net Name	MachXO5-25 Ball Location
1	HPE_RESOUT#	F5
2	GND	—
3	EXPCON_IO0	D3
4	EXPCON_IO1	E4
5	EXPCON_IO2	C3
6	EXPCON_IO3	C2
7	EXPCON_IO4	A4
8	EXPCON_IO5	E5
9	EXPCON_IO6	F6
10	EXPCON_IO7	C5
11	EXPCON_IO8	B2
12	EXPCON_IO9	A2
13	EXPCON_IO10	B3
14	EXPCON_IO11	A3
15	EXPCON_IO12	B4
16	EXPCON_IO13	D5
17	EXPCON_IO14	A5
18	EXPCON_IO15	B5
19	GND	—
20	EXPCON_3V3**	—
21	EXPCON_IO16	A6
22	GND	—
23	EXPCON_IO17	B6
24	GND	—
25	EXPCON_IO18	A7
26	GND	—
27	EXPCON_IO19	A8
28	EXPCON_IO20	C6
29	EXPCON_IO21	B8
30	GND	—
31	EXPCON_IO22	B9
32	EXPCON_IO23	A9
33	EXPCON_IO24	D6
34	GND	—

© 2022 Lattice Semiconductor Corp. All Lattice trademarks, registered trademarks, patents, and disclaimers are as listed at www.latticesemi.com/legal.
All other brand or product names are trademarks or registered trademarks of their respective holders. The specifications and information herein are subject to change without notice.

J9 Pin Number	Net Name	MachXO5-25 Ball Location
35	EXPCON_IO25	C8
36	EXPCON_IO26	E7
37	EXPCON_IO27	E8
38	CARDSEL#*	—
39	EXPCON_IO28	E6
40	GND	—

Notes:

* Net is optionally connected to power source through resistor DNI.

** Net is optionally connected to power source through resistor DI.

10.2. Arduino Board GPIO Headers

The board provides four headers, J2, J3, J4, and J5, for Arduino Zero board adaption.

Table 10.3. Arduino J2 Pin Connections

J2 Pin Number	Net Name	Arduino ZERO Board Signal	MachXO5-25 Ball Location	Comments
1	AR_IO8	~D8/PA06	L12	—
2	AR_IO9	~D9/PA07	L13	—
3	AR_SS_IO10	~D10/PA18/SS	L14	Defaults to SS function on Arduino ZERO Board.
4	AR_MOSI_IO11	~D11/PA16/COPI	L15	Defaults to COPI function on Arduino ZERO Board.
5	AR_MISO_IO12	~D12/PA19/CIPO	L16	Defaults to CIPO function on Arduino ZERO Board.
6	AR_SCK_IO13	~D13/PA17/SCK	K19	Defaults to SCK function on Arduino ZERO Board.
7	GND	GND	—	—
8	AR_AREF	AREF/PA03	L19	AR_AREF connection to AREF through R43.
9	AR_SDA	D20/PA22/SDA	N18	Defaults to SDA function on Arduino ZERO Board. It is optionally connected to SDA0 through R44 (DNI).
10	AR_SCL	D21/PA23/SCL	N19	Defaults to SCL function on Arduino ZERO Board. It is optionally connected to SCL0 through R45 (DNI).

Table 10.4. Arduino J3 Pin Connections

J3 Pin Number	Net Name	Arduino ZERO Board Signal	MachXO5-25 Ball Location	Comments
1	AR_IO0	D0/RX/PA11	J19	—
2	AR_IO1	D1//TX/PA10	J20	—
3	AR_IO2	D2/PA14	K12	—
4	AR_IO3	~D3/PA09	K13	—
5	AR_IO4	~D4/PA08	K14	—
6	AR_IO5	~D5/PA15	K15	—
7	AR_IO6	~D6/PA20	K16	—
8	AR_IO7	D7/PA21	K17	—

© 2022 Lattice Semiconductor Corp. All Lattice trademarks, registered trademarks, patents, and disclaimers are as listed at www.latticesemi.com/legal.
All other brand or product names are trademarks or registered trademarks of their respective holders. The specifications and information herein are subject to change without notice.

Table 10.5. Arduino J4 Pin Connections

J4 Pin Number	Net Name	Arduino ZERO Board Signal	MachXO5-25 Ball Location	Comments
1	AR_IO14	ATN	L20	—
2	NC	IOREF	—	—
3	AR_RESET	RESET	K20	Pin U20 should be set high by default. Avoid Arduino ZERO board in Reset status when connected.
4	+3.3V_AR	+3V3	—	3.3 V power supply from Arduino ZERO board.
5	AR_5V	+5V	—	Jump to 5 V onboard power rail through JP6.
6	GND	GND	—	—
7	GND	GND	—	—
8	+12V	VIN	—	Share with +12V onboard power rail.

Note:
If JP6 is installed, 5 V power can be supplied from either the Arduino board or the MachXO5-NX Development Board. With JP6 removed, both boards need their own 5 V power.

Table 10.6. Arduino J5 Pin Connections

J5 Pin Number	Net Name	Arduino ZERO Board Signal	MachXO5-25 Ball Location	Comments
1	AR_AD0	D14/ADC0/PA02	M11	Defaults to ADC0 on Arduino ZERO Board
2	AR_AD1	D15/ADC1/PB08	M12	Defaults to ADC1 on Arduino ZERO Board
3	AR_AD2	D16/ADC2/PB09	M13	Defaults to ADC2 on Arduino ZERO Board
4	AR_AD3	D17/ADC3/PA04	M14	Defaults to ADC3 on Arduino ZERO Board
5	AR_AD4	D18/ADC4/PA05	M17	Defaults to ADC4 on Arduino ZERO Board
6	AR_AD5	D19/ADC5/PB02	M18	Defaults to ADC5 on Arduino ZERO Board

10.3. FX12 Headers

The board provides two headers, U4 and U5, to connect to FX12 compatible boards or cables. Each header has eight pairs of Low-Voltage Differential Signaling (LVDS) signals for high-speed data receiver.

Table 10.7. FX12 U4 Header Pin Connections

U4 Pin Number	Net Name	MachXO5-25 Ball Location
1	CH0_DCK_P	W7
2	CH0_DCK_N	Y7
3	GND	—
4	CH0_DATA0_P	T8
5	CH0_DATA0_N	U8
6	GND	—
7	CH0_DATA2_P	R10
8	CH0_DATA2_N	T10
9	GND	—
10	FX_SN	V3
11	FX_SCLK	V4
12	PWR_12V**	—
13	SDA2	R6
14	SCL2	R7
15	GND	—
16	CH2_DATA0_P	N10
17	CH2_DATA0_N	P10

© 2022 Lattice Semiconductor Corp. All Lattice trademarks, registered trademarks, patents, and disclaimers are as listed at www.latticesemi.com/legal.
All other brand or product names are trademarks or registered trademarks of their respective holders. The specifications and information herein are subject to change without notice.

U4 Pin Number	Net Name	MachXO5-25 Ball Location
18	GND	—
19	CH2_DCK_P	W8
20	CH2_DCK_N	Y8
21	PWR_12V**	—
22	RESETN	V2
23	PWR_5-0V*	—
24	CH0_DATA1_P	W9
25	CH0_DATA1_N	Y9
26	PWR_3-3V*	—
27	CH0_DATA3_P	W10
28	CH0_DATA3_N	Y10
29	PWR_1-8V*	—
30	FX_MOSI	U5
31	FX_MISO	U6
32	PWR_1-8V*	—
33	GND	—
34	GND	—
35	PWR_3-3V*	—
36	CH2_DATA1_P	U10
37	CH2_DATA1_N	V10
38	PWR_5-0V*	—
39	SDA1	R4
40	SCL1	R5

Notes:

* Signal is optionally connected to power source through resistor DNI.

** 12 V power needs external supply from pin 8 of J4.

Table 10.8. FX12 U5 Header Pin Connections

U5 Pin Number	Net Name	MachXO5-25 Ball Location
1	CH1_DCK_P	Y11
2	CH1_DCK_N	W11
3	GND	—
4	CH1_DATA0_P	V11
5	CH1_DATA0_N	U11
6	GND	—
7	CH1_DATA2_P	V12
8	CH1_DATA2_N	U12
9	GND	—
10	FX_SN	V3
11	FX_SCLK	V4
12	PWR_12V**	—
13	SDA2	R6
14	SCL2	R7
15	GND	—
16	CH3_DATA0_P	T11
17	CH3_DATA0_N	R11
18	GND	—
19	CH3_DCK_P	Y12
20	CH3_DCK_N	W12

© 2022 Lattice Semiconductor Corp. All Lattice trademarks, registered trademarks, patents, and disclaimers are as listed at www.latticesemi.com/legal.
All other brand or product names are trademarks or registered trademarks of their respective holders. The specifications and information herein are subject to change without notice.

U5 Pin Number	Net Name	MachXO5-25 Ball Location
21	PWR_12V**	—
22	RESETN	V2
23	PWR_5-0V*	—
24	CH1_DATA1_P	Y14
25	CH1_DATA1_N	W14
26	PWR_3-3V*	—
27	CH1_DATA3_P	Y13
28	CH1_DATA3_N	W13
29	PWR_1-8V	—
30	FX_MOSI	U5
31	FX_MISO	U6
32	PWR_1-8V*	—
33	GND	—
34	GND	—
35	PWR_3-3V*	—
36	CH3_DATA1_P	N11
37	CH3_DATA1_N	P11
38	PWR_5-0V*	—
39	SDA1	R4
40	SCL1	R5

Notes:

* Signal is optionally connected to power source through resistor DNI.

** 12 V power needs external supply from pin 8 of J4.

10.4. Aardvark Header (DNI)

The Aardvark I^2C /SPI Host Adapter is a fast and powerful I^2C bus and SPI bus host adapter through USB. It allows you to interface a Windows, Linux, or Mac OS X PC through USB to a downstream embedded system environment and transfer serial messages using the I^2C and SPI protocols.

The MachXO5-NX Development Board provides an Aardvark compatible header for customer applications. The I^2C bus is optional connecting to a global I^2C bus on the board.

Table 10.9. Aardvark J7 Header Pin Connections

J7 Pin Number	Net Name	MachXO5-25 Ball Location
1	AK_SCL	M19
2	GND	—
3	AK_SDA	M20
4	+5V_I2C	—
5	AK_MISO	N14
6	+5V_SPI	—
7	AK_SCLK	N15
8	AK_MOSI	N17
9	AK_SS	N16
10	GND	—

© 2022 Lattice Semiconductor Corp. All Lattice trademarks, registered trademarks, patents, and disclaimers are as listed at www.latticesemi.com/legal.
All other brand or product names are trademarks or registered trademarks of their respective holders. The specifications and information herein are subject to change without notice.

10.5. Raspberry Pi Board GPIO Header

The MachXO5-NX Development Board provides a 40-pin receptacle that is compatible with the GPIO header of Raspberry Pi 2/3 serial models.

Table 10.10. Raspberry Pi J6 Header Pin Connections

J6 Pin Number	Net Name	MachXO5-25 Ball Location
1	3.3V_RASP*	—
2	RASP_5V**	—
3	RASP_IO02	L8
4	RASP_5V**	—
5	RASP_IO03	L7
6	GND	—
7	RASP_IO04	L6
8	RASP_IO14	M7
9	GND	—
10	RASP_IO15	K3
11	RASP_IO17	L5
12	RASP_IO18	M6
13	RASP_IO27	L4
14	GND	—
15	RASP_IO22	L2
16	RASP_IO23	L3
17	3.3V_RASP*	—
18	RASP_IO24	L1
19	RASP_IO10	M2
20	GND	—
21	RASP_IO09	M1
22	RASP_IO25	N2
23	RASP_IO11	N1
24	RASP_IO08	P2
25	GND	—
26	RASP_IO07	P1
27	RASP_ID_SD	K2
28	RASP_ID_SC	K1
29	RASP_IO05	N3
30	GND	—
31	RASP_IO06	N4
32	RASP_IO12	P3
33	RASP_IO13	P4
34	GND	—
35	RASP_IO19	P5
36	RASP_IO16	M5
37	RASP_IO26	P6
38	RASP_IO20	N7
39	GND	—

© 2022 Lattice Semiconductor Corp. All Lattice trademarks, registered trademarks, patents, and disclaimers are as listed at www.latticesemi.com/legal.
All other brand or product names are trademarks or registered trademarks of their respective holders. The specifications and information herein are subject to change without notice.

J6 Pin Number	Net Name	MachXO5-25 Ball Location
40	RASP_IO21	M8

Notes:

* 3.3 V power is supplied from Raspberry Pi board.

** 5 V power can come from either the Raspberry Pi board or the MachXO5-NX Development Board when jumper JP7 is installed. When jumper JP7 is not installed, both boards need their own 5 V power.

10.6. PMOD Headers

The MachXO5-NX Development Board provides two 12-pin receptacle headers that is compatible with the Digilent PMOD™ interface spec.

Table 10.11. J15 Header Pin Connections

J15 Pin Number	Net Name	MachXO5-25 Ball Location
1	PMOD0_1	G7
2	PMOD0_2	G9
3	PMOD0_3	G8
4	PMOD0_4	H8
5	GND	—
6	VCCIO0	—
7	PMOD0_5	F7
8	PMOD0_6	F9
9	PMOD0_7	F8
10	PMOD0_8	H9
11	GND	—
12	VCCIO0	—

Table 10.12. J16 Header Pin Connections

J16 Pin Number	Net Name	MachXO5-25 Ball Location
1	PMOD1_1	E11
2	PMOD1_2	D13
3	PMOD1_3	D15
4	PMOD1_4	C16
5	GND	—
6	VCCIO1	—
7	PMOD1_5	D11
8	PMOD1_6	C13
9	PMOD1_7	C15
10	PMOD1_8	D16
11	GND	—
12	VCCIO1	—

10.7. MIPI Camera Header

The MachXO5-NX Development Board support MIPI Camera sensor input with soft D-PHY. Figure 10.1 shows the block diagram of the MIPI Camera Sensor interface on the board. The data path interface between the camera sensor module and MachXO5-25 is CSI-2. The cameras are configured from the MachXO5-25 device through the MIPI Sensor Control interface including I^2C, frame sync, and reset signals drive the camera.

© 2022 Lattice Semiconductor Corp. All Lattice trademarks, registered trademarks, patents, and disclaimers are as listed at www.latticesemi.com/legal.
All other brand or product names are trademarks or registered trademarks of their respective holders. The specifications and information herein are subject to change without notice.

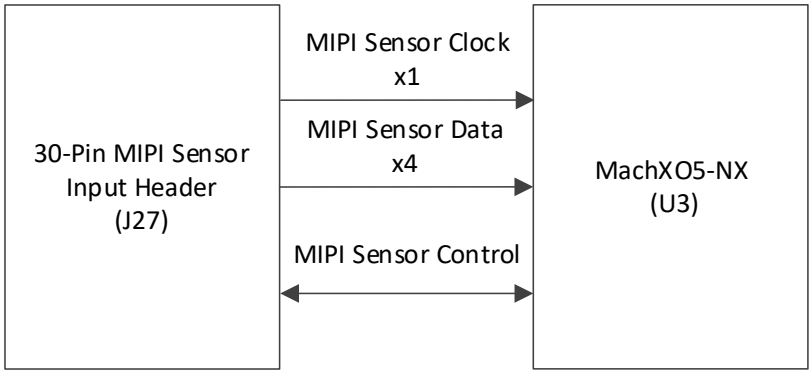

Figure 10.1. MIPI Camera Sensor Interface

MachXO5-NX Development Board supports a 30-pin Kyocera header footprint of 245804030000829+ for MIPI Camera sensor input. Table 10.13 show the signal assignment for the MIPI Camera sensor input Header of J27. Use J24 as described in Figure 10.2 to select Camera CVDD power for Pin 25 of J8.

Table 10.13. MIPI Camera Sensor Interconnections

MIPI Camera Sensor Input Header (J8) Pin Number	Net Name	MachXO5-25 Ball Location
1	NC	—
2	DPHY0_CKN	R14
3	DPHY0_CKP	T14
4	GND	—
5	DPHY0_DN3	N12
6	DPHY0_DP3	N13
7	GND	—
8	DPHY0_DN1	R13
9	DPHY0_DP1	P13
10	GND	—
11	DPHY0_DN0	T13
12	DPHY0_DP0	U13
13	GND	—
14	DPHY0_DN2	U14
15	DPHY0_DP2	V13
16	GND	—
17	GND	—
18	VDD2V8	—
19	NC	—
20	DPHY0_CLK	K7
21	DPHY0_FSYNC	K6
22	DPHY0_SDA	H5
23	DPHY0_SCL	H6
24	DPHY0_RST	H7
25	CVDD	—
26	VRAM (DVDD1V8)	
27	GND	—
28	GND	—
29	AVDD2V8	—
30	GND	—

© 2022 Lattice Semiconductor Corp. All Lattice trademarks, registered trademarks, patents, and disclaimers are as listed at www.latticesemi.com/legal.
All other brand or product names are trademarks or registered trademarks of their respective holders. The specifications and information herein are subject to change without notice.

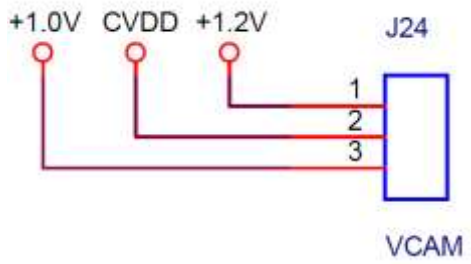

Figure 10.2. MIPI Camera Sensor Power Supply Header

10.8. User I²C Interface

This board provides more options for user I²C access from different MachXO5-25 Wide Range I/O to multiple onboard headers. They are solid connected for target applications, but those connections to bridge SDA0/SCL0 are not populated in default. You need to build your interconnection for I²C applications across the board. For example, if you want to use an Ardvark I²C host to access FX12 adapt board, you can use internal fabric logic of MachXO5-25 to bridge AK_SCL/AK_SDA with SCL1/SDA1 and SCL2/SDA2, or add bridge resistors according to Table 10.14 to connect all of them to SCL0/SDA0 for bridge interconnections on board without involvement of FPGA. You also need to setup the design with tri-state mode for outputting high with pull up resistors. If there is no pull up setup on the counterpart boards or internal GPIOs of FPGA, you can add JP12 and JP13 to leverage the R33 and R34 for pulling up bridge SCL0/SDA0 to selectable VCCIO2. Take care that the DPHY0_SCL/DPHY0_SDA are special case. They need dedicate pull up resistors R233/R234 due to they are supported from 1.8 V I/O Bank 9. Also, R233/R234 can be used to pull up SCL0/SDA0 by adding R229/R228 when Bank 7 is selected to support 1.8 V for FX12 header I²C control. At this time, JP12 and JP13 should be removed and R224/R225 or R226/R227 should be added to leverage the 1.8 V pull up for I/O Bank 7.

Table 10.14. I²C Connections

Extend header	MachXO5-25 Bank	MachXO5-25 Ball Location for JTAG	Net Name	Bridge Resistor to SCL0/SDA0
Versa Header (J9)	0	D5	EXPCON_IO13	R35 (DNI)
		B5	EXPCON_IO15	R37 (DNI)
Aardvark Header (J7)	3	M19	AK_SCL	R231 (DNI)
		M20	AK_SDA	R230 (DNI)
Arduino Header (J2)	3	N19	AR_SCL	R45 (DNI)
		N18	AR_SDA	R44 (DNI)
FX12 Headers (U4/U5)	7	R5	SCL1	R224 (DNI)
		R4	SDA1	R225 (DNI)
FX12 Headers (U4/U5)	7	R7	SCL2	R226 (DNI)
		R6	SDA2	R227 (DNI)
Raspberry Pi Header (J6)	8	K1	RASP_ID_SC	R85 (DNI)
		K2	RASP_ID_SD	R87 (DNI)
Raspberry Pi Header (J6)	8	L7	RASP_IO03	R96 (DNI)
		L8	RASP_IO02	R84 (DNI)
Camera Header (J27)	9	H6	DPHY0_SCL	R229 (DNI)
		H5	DPHY0_SDA	R228 (DNI)

© 2022 Lattice Semiconductor Corp. All Lattice trademarks, registered trademarks, patents, and disclaimers are as listed at www.latticesemi.com/legal.
All other brand or product names are trademarks or registered trademarks of their respective holders. The specifications and information herein are subject to change without notice.

10.9. ADC and Potentiometer

There are two dedicate ADC input pairs for MachXO5-25. This board provides multiple application options. For default population, one pair of ADC0 is used to measure the core VCC voltage drop through a 10 mΩ resistor R112. Therefore, the core VCC current is calculable, as shown in Figure 10.3. Positive input of another pair ADC1 is connected to a 10 kΩ Trimmer Potentiometers (POT1) which provides voltage variation from 0 V to selectable VCCIO4, as shown in Figure 10.4. The negative input of ADC1 is grounded through 1 kΩ resistor.

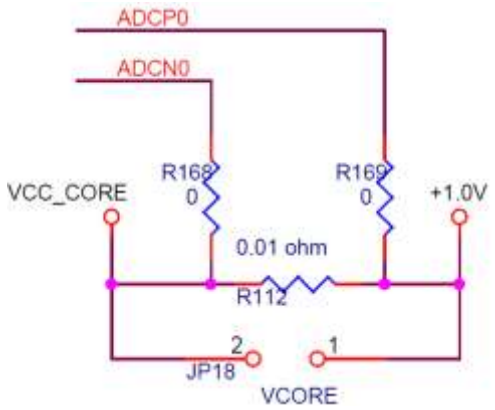

Figure 10.3. Circuit Design for ADC0

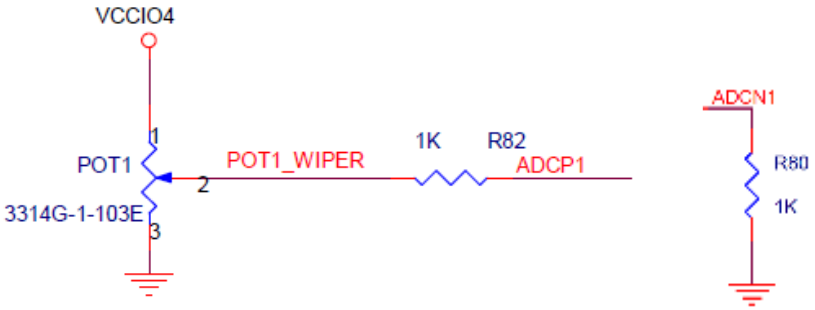

Figure 10.4. Circuit Design for ADC1

Rotate the Trimmer clockwise to decrease the voltage, as shown in Figure 10.5. To increase the voltage to ADCP1, rotate the POT counter-clockwise.

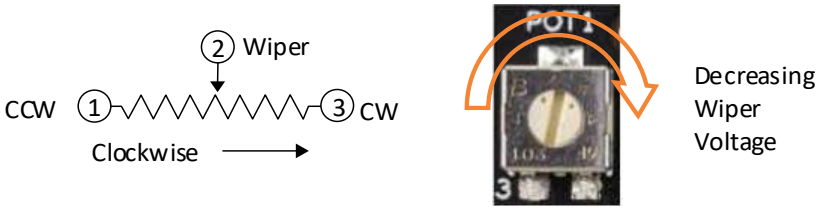

Figure 10.5. Trimmer Wiper Description

© 2022 Lattice Semiconductor Corp. All Lattice trademarks, registered trademarks, patents, and disclaimers are as listed at www.latticesemi.com/legal.
All other brand or product names are trademarks or registered trademarks of their respective holders. The specifications and information herein are subject to change without notice.

Optionally, both ADC pairs are also routed to PMOD like header J28. For their signal assignment, refer to Table 10.15.

Table 10.15. J28 (DNI) Header Pin Connections

J28 Pin Number	Net Name	MachXO5-25 Ball Location	Application Notes
1	MDIR0	W1	Within IO Bank 7
2	MEN0	V5	Within IO Bank 7
3	ADCP0	Y16	Remove R168 for separation
4	ADCN0	Y17	Remove R169 for separation
5	GND	—	—
6	VCCIO7	—	1.8V/3.3V selectable
7	MDIR1	W2	Within IO Bank 7
8	MEN1	V6	Within IO Bank 7
9	ADCP1	Y18	Remove R82 for separation
10	ADCN1	Y19	Remove R80 for separation
11	GND	—	—
12	VCCIO7	—	1.8V/3.3V selectable

10.10.Other Test Points

The MachXO5-NX Development Board provides some test points for user flexibility.

Table 10.16. Test Point Connections

Test Point	Net Name	MachXO5-25 Ball Location
TP1	PMU_WAKEUPN	G17
TP2	TP2	K18

© 2022 Lattice Semiconductor Corp. All Lattice trademarks, registered trademarks, patents, and disclaimers are as listed at www.latticesemi.com/legal.
All other brand or product names are trademarks or registered trademarks of their respective holders. The specifications and information herein are subject to change without notice.

11. LEDs and Switches

LEDs and switches of the MachXO5-NX Development Board that can be used in demo and customer designs are described in this section.

11.1. Four-Position DIP Switch

Four MachXO5-25 pins are connected to the four switches of SW1, as shown in the circuit design in Figure 11.1. The CTS side actuated DIP switches are connected to logic level 0 when in the ON position, as shown in Figure 11.2.

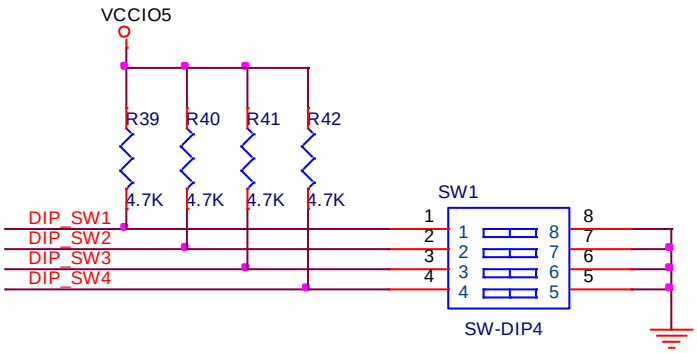

Figure 11.1. Four-Position DIP Switch Circuits

Figure 11.2. Four-position DIP Switch

One side of each switch is connected to GPIOs within the VCCIO5 bank and pulled up through 4.7 kΩ resistors. The other side is grounded. The designated pins are connected, as shown in Table 11.1.

Table 11.1. Four-Position DIP Switch Signals

Net Name	MachXO5-25 Ball Location	SW1 DIP Switch Position	4.7 kΩ Pull up Resistor	Logic Level at ON Position
DIP_SW1	T1	1	R39	0
DIP_SW2	T2	2	R40	0
DIP_SW3	T3	3	R41	0
DIP_SW4	T4	4	R42	0

11.2. General Purpose Push Buttons

The MachXO5-NX Development Board provides four push button switches, SW2, SW3, SW4 and SW5, for demos and user applications. Pressing these buttons drives a logic level *0* to the corresponding I/O pins.

© 2022 Lattice Semiconductor Corp. All Lattice trademarks, registered trademarks, patents, and disclaimers are as listed at www.latticesemi.com/legal.
All other brand or product names are trademarks or registered trademarks of their respective holders. The specifications and information herein are subject to change without notice.

Table 11.2. Push Button Switch Signals

Push Button Ref Name	Net Name	MachXO5-25 Ball Location	Test Points
SW2	PB1	E19	TP3
SW3	PB2	F20	TP4
SW4	PB3	B7	Pin 2 of JP4
SW5	PB4	G20	Pin 2 of JP5

SW2 and SW3 are designed for general-purpose applications. SW4 and SW5 are designed with additional jumper JP4 and JP5. SW4 can be used as ASC global reset push button when JP4 is set to connect with EXPCON_IO20, which is connect to MANDATORY_RESET signal when mated with Lattice ASC Bridge Board. Refer to ASC Bridge Board Evaluation Board User Guide (FPGA-EB-02025) for detailed information with ASC application. SW5 can be used as PROGRAMN push button when JP5 is set to trigger the configuration process without power cycle. For detailed information on PROGRAMN, refer to MachXO5 Programming and Configuration User Guide (FPGA-TN-02271).

11.3. General Purpose LEDs

The MachXO5-NX Development Board provides eight red LEDs that are connected to I/O within Bank 5. The LEDs are lighted when the output is driven LOW. Table 11.3 lists the red LEDs and their associated pins.

Table 11.3. LED Signals

Red LEDs Ref Name	Net Name	MachXO5-25 Ball Location
D1	XLED0	R3
D2	XLED1	R2
D3	XLED2	R1
D4	XLED3	P7
D5	XLED4	H12
D6	XLED5	H11
D7	XLED6	G13
D8	XLED7	G12

11.4. Seven-Segment Display

The MachXO5-NX Development Board features a blue Seven-segment Display of D20, as shown in Figure 11.3, controlled by I/O within Bank 5. Each segment LED is lighted blue when the output is driven LOW. Table 11.4 lists the connections between display LED segments and their associated driver pins.

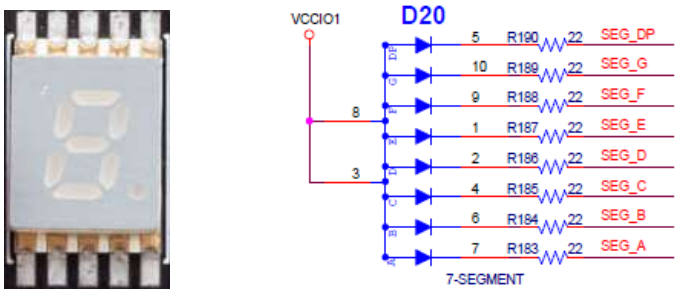

Figure 11.3. Seven-Segment Display and its Symbol

© 2022 Lattice Semiconductor Corp. All Lattice trademarks, registered trademarks, patents, and disclaimers are as listed at www.latticesemi.com/legal.
All other brand or product names are trademarks or registered trademarks of their respective holders. The specifications and information herein are subject to change without notice.

Table 11.4. Seven-segment Display Connections

Net Name	D20 Pin Number	MachXO5-25 Ball Location
SEG_A	7	F14
SEG_B	6	G11
SEG_C	4	E15
SEG_D	2	F11
SEG_E	1	A15
SEG_F	9	A16
SEG_G	10	A17
SEG_DP	5	A18

© 2022 Lattice Semiconductor Corp. All Lattice trademarks, registered trademarks, patents, and disclaimers are as listed at www.latticesemi.com/legal.
All other brand or product names are trademarks or registered trademarks of their respective holders. The specifications and information herein are subject to change without notice.

12. Software Requirements

The following software are required to develop designs for the MachXO5™-NX Development Board:

- Radiant 3.11 (or later version)
- Radiant Programmer 3.11 (or later version)

13. Storage and Handling

Static electricity can shorten the life span of electronic components. Observe these tips to prevent damage that can occur from electrostatic discharge:

- Use antistatic precautions such as operating on an antistatic mat and wearing an antistatic wristband.
- Store the MachXO5™-NX Development Board in the provided packaging.
- Touch a metal USB housing to equalize voltage potential between you and the board.

14. Ordering Information

Table 14.1 Ordering Information

Description	Ordering Part Number	China RoHS Environment-Friendly Use Period (EFUP)
MachXO5-NX Development Board	LFMXO5-25-EVN	

© 2022 Lattice Semiconductor Corp. All Lattice trademarks, registered trademarks, patents, and disclaimers are as listed at www.latticesemi.com/legal.
All other brand or product names are trademarks or registered trademarks of their respective holders. The specifications and information herein are subject to change without notice.

Technical Support Assistance

Submit a technical support case through www.latticesemi.com/techsupport.

For frequently asked questions, refer to the Lattice Answer Database at www.latticesemi.com/Support/AnswerDatabase.

© 2022 Lattice Semiconductor Corp. All Lattice trademarks, registered trademarks, patents, and disclaimers are as listed at www.latticesemi.com/legal.
All other brand or product names are trademarks or registered trademarks of their respective holders. The specifications and information herein are subject to change without notice.

Appendix A. MachXO5-NX Development Board Schematics

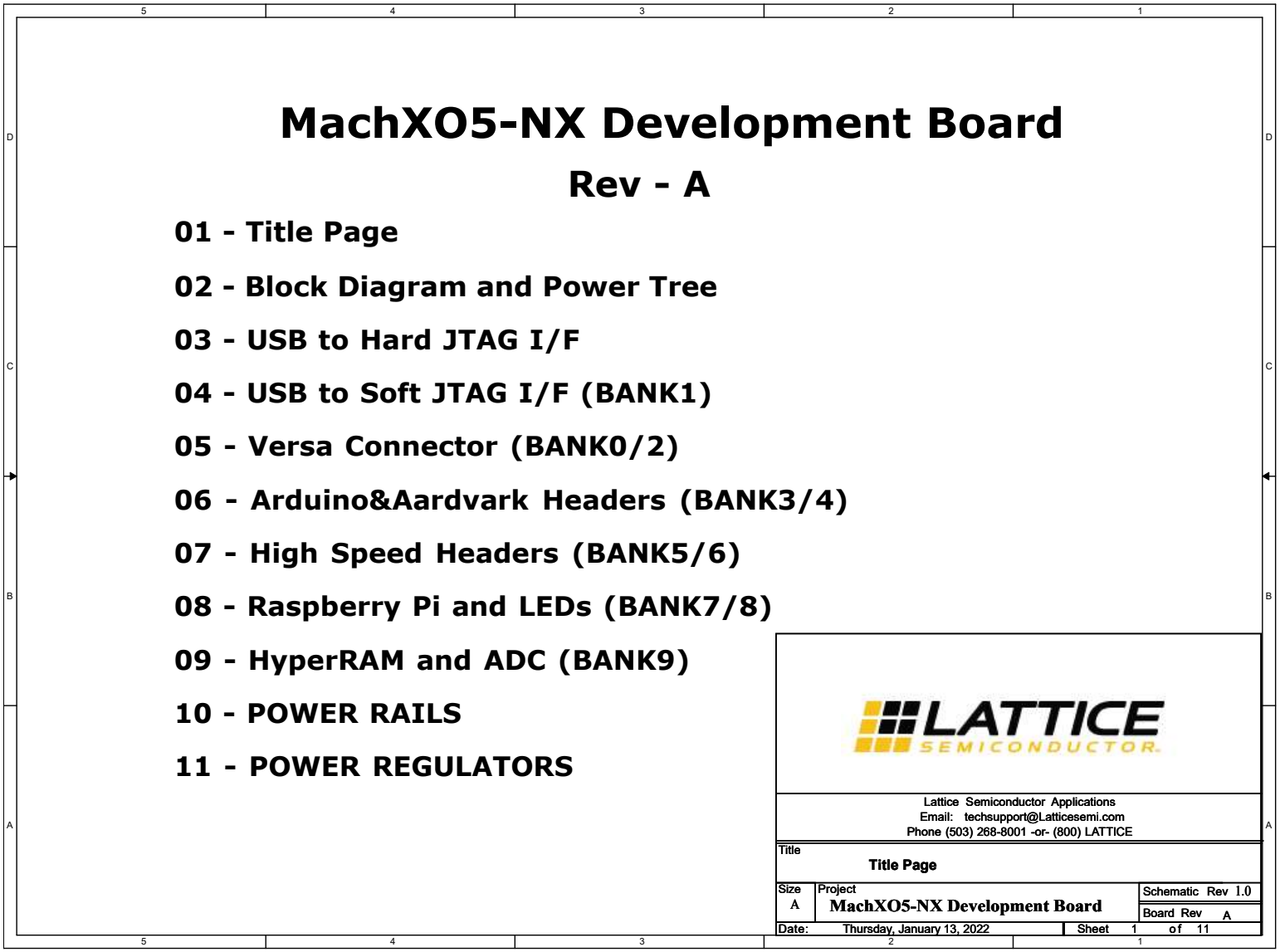

Figure A. 1. Title Page

© 2022 Lattice Semiconductor Corp. All Lattice trademarks, registered trademarks, patents, and disclaimers are as listed at www.latticesemi.com/legal.
All other brand or product names are trademarks or registered trademarks of their respective holders. The specifications and information herein are subject to change without notice.

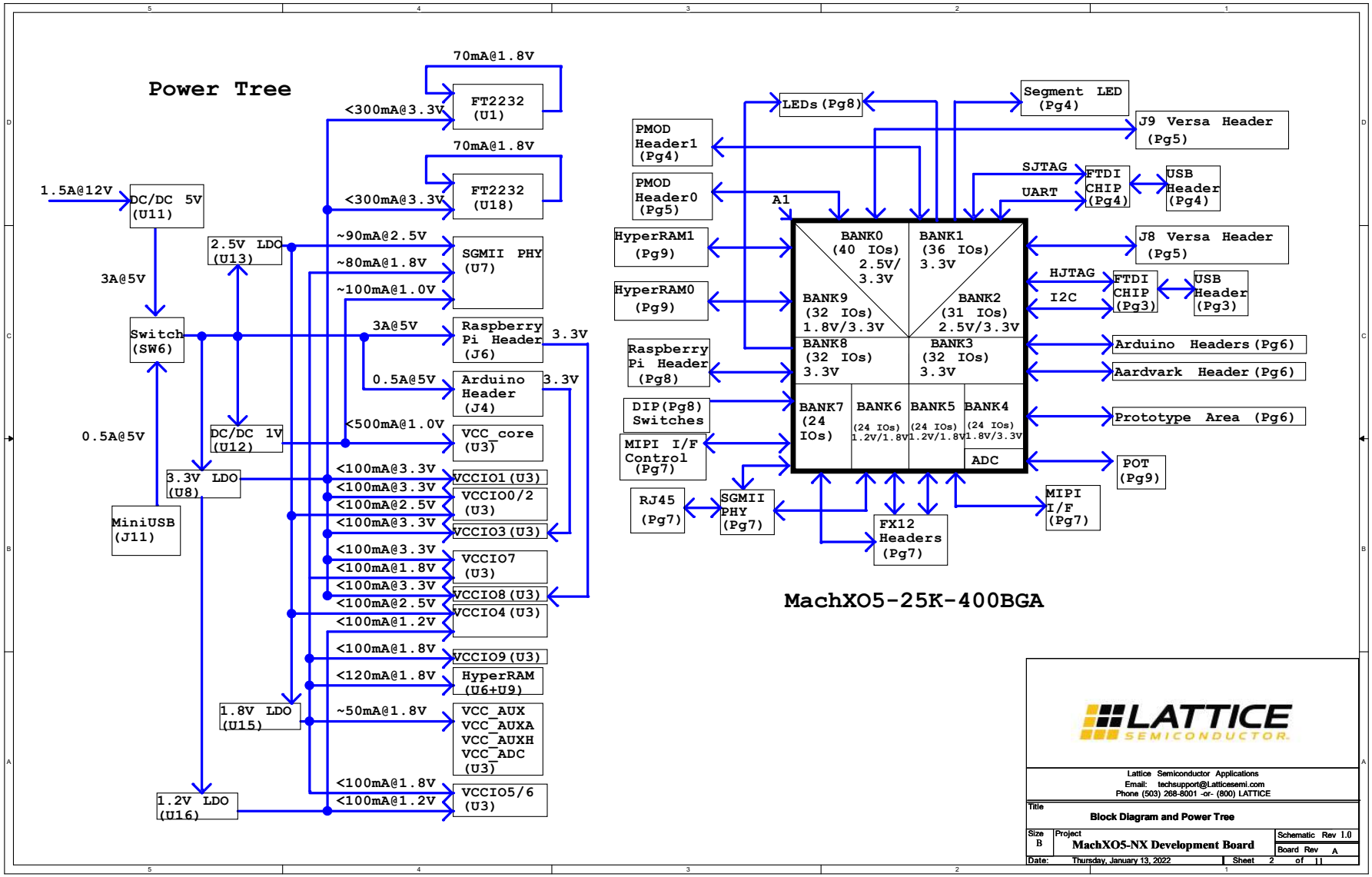

Figure A. 2. Block Diagram and Power Tree

© 2022 Lattice Semiconductor Corp. All Lattice trademarks, registered trademarks, patents, and disclaimers are as listed at www.latticesemi.com/legal.
All other brand or product names are trademarks or registered trademarks of their respective holders. The specifications and information herein are subject to change without notice.

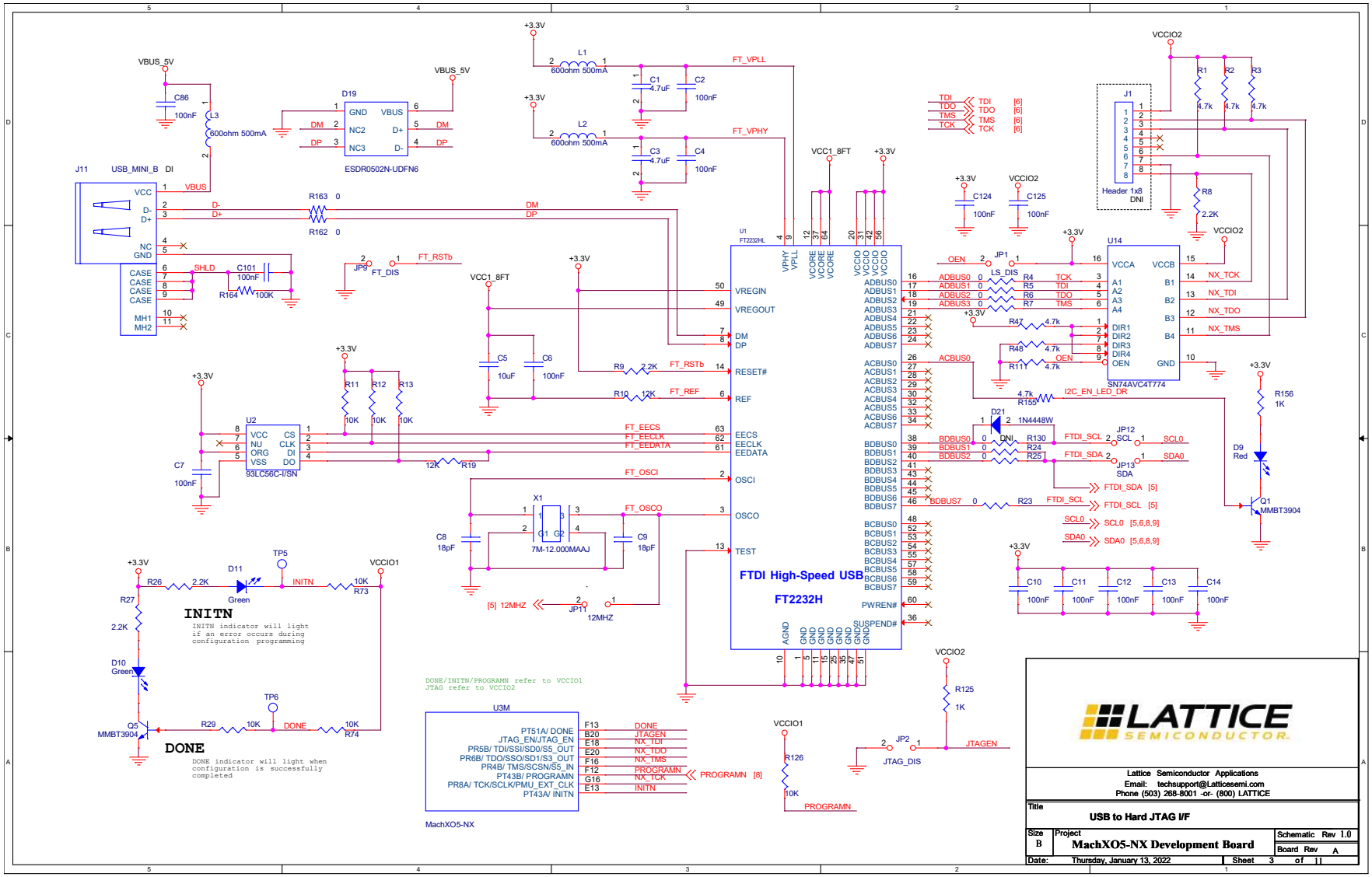

Figure A. 3. USB to Hard JTAG I/F

© 2022 Lattice Semiconductor Corp. All Lattice trademarks, registered trademarks, patents, and disclaimers are as listed at www.latticesemi.com/legal.
All other brand or product names are trademarks or registered trademarks of their respective holders. The specifications and information herein are subject to change without notice.

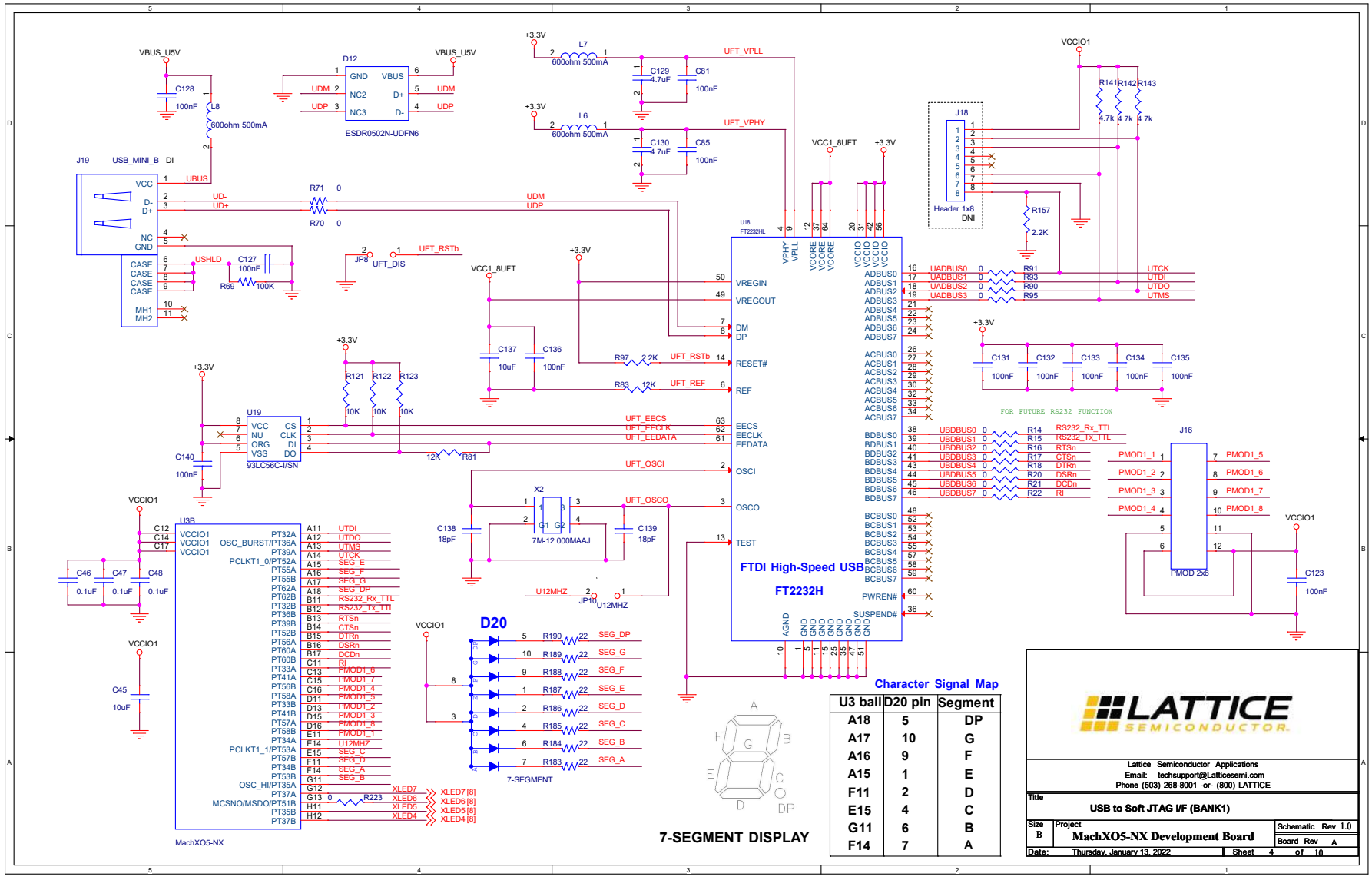

Figure A. 4. USB to Soft JTAG I/F (BANK1)

© 2022 Lattice Semiconductor Corp. All Lattice trademarks, registered trademarks, patents, and disclaimers are as listed at www.latticesemi.com/legal.
All other brand or product names are trademarks or registered trademarks of their respective holders. The specifications and information herein are subject to change without notice.

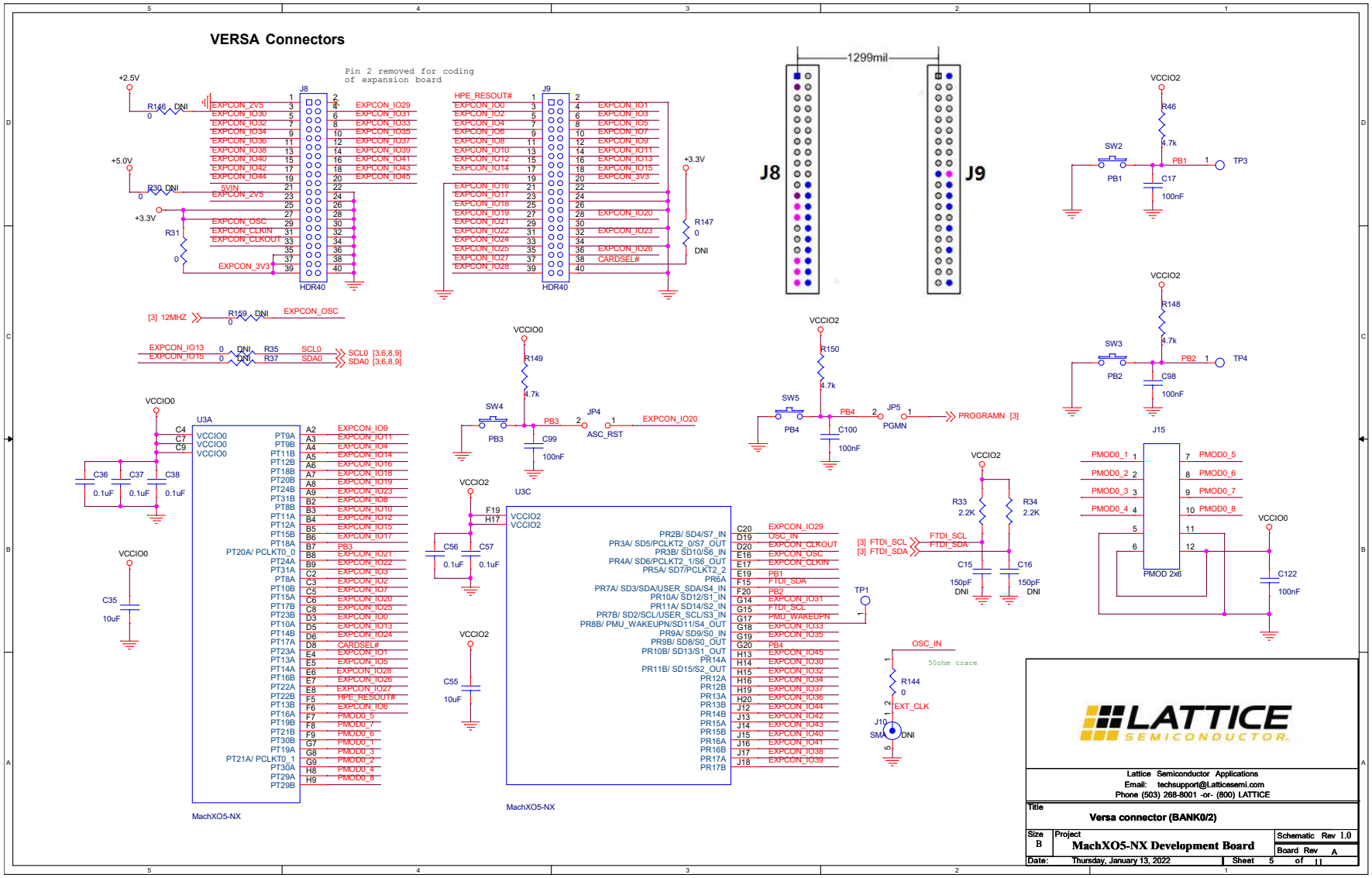

Figure A. 5. Versa Connector (BANK0/2)

© 2022 Lattice Semiconductor Corp. All Lattice trademarks, registered trademarks, patents, and disclaimers are as listed at www.latticesemi.com/legal.
All other brand or product names are trademarks or registered trademarks of their respective holders. The specifications and information herein are subject to change without notice.

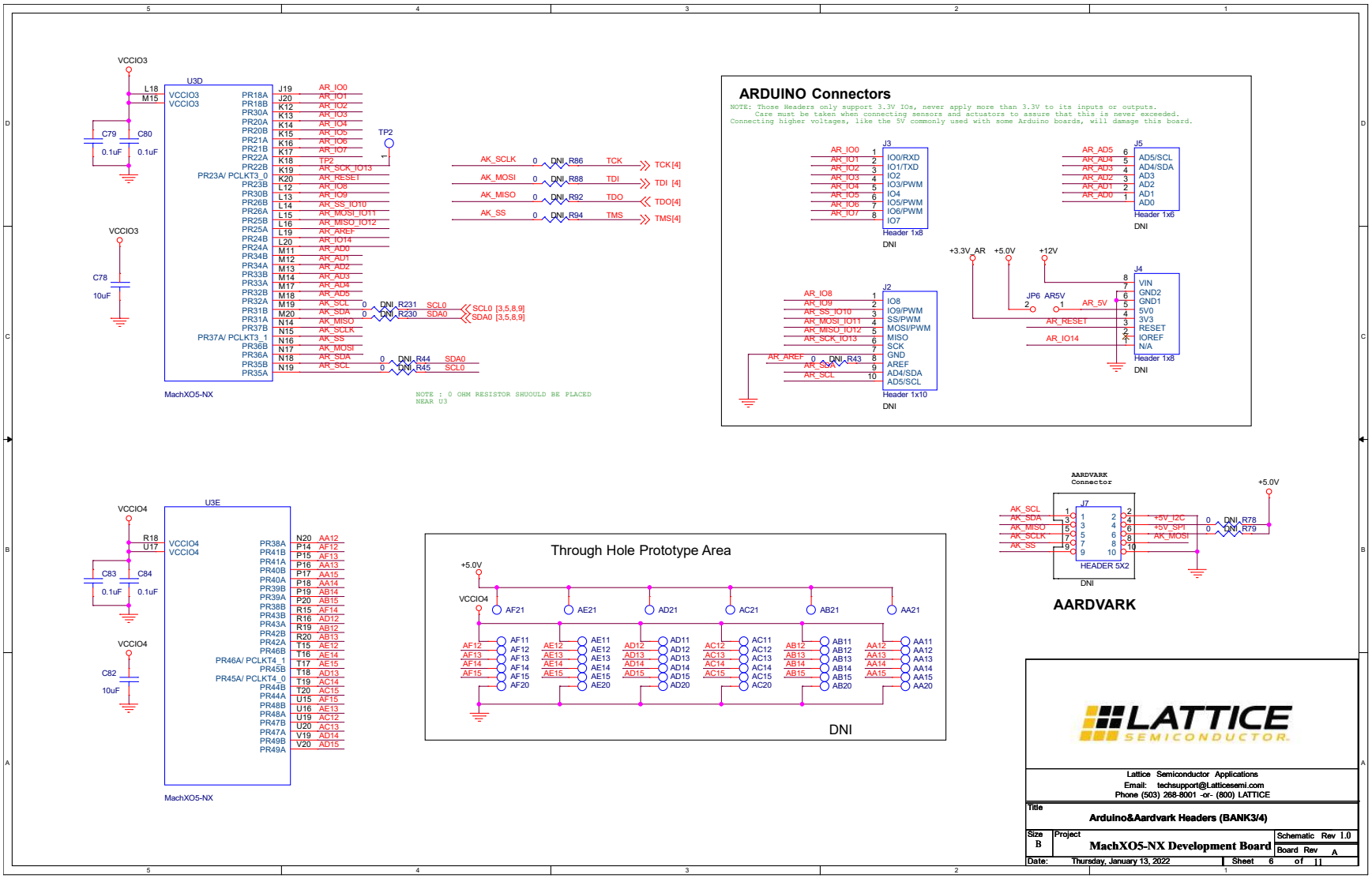

Figure A. 6. Arduino&Aardvark Header (BANK3/4)

© 2022 Lattice Semiconductor Corp. All Lattice trademarks, registered trademarks, patents, and disclaimers are as listed at www.latticesemi.com/legal.
All other brand or product names are trademarks or registered trademarks of their respective holders. The specifications and information herein are subject to change without notice.

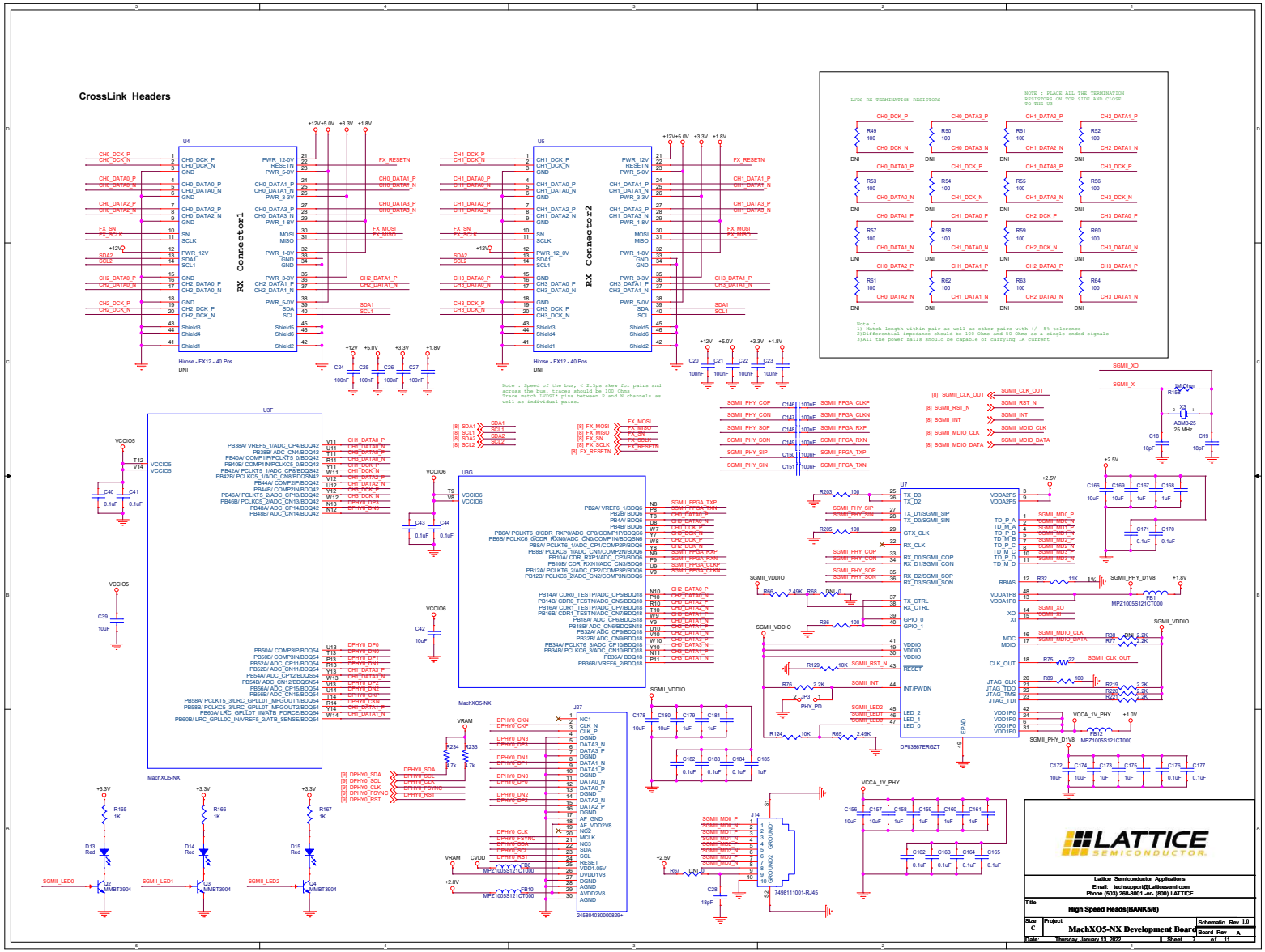

Figure A. 7. High Speed Header (BANK5/6)

© 2022 Lattice Semiconductor Corp. All Lattice trademarks, registered trademarks, patents, and disclaimers are as listed at www.latticesemi.com/legal.
All other brand or product names are trademarks or registered trademarks of their respective holders. The specifications and information herein are subject to change without notice.

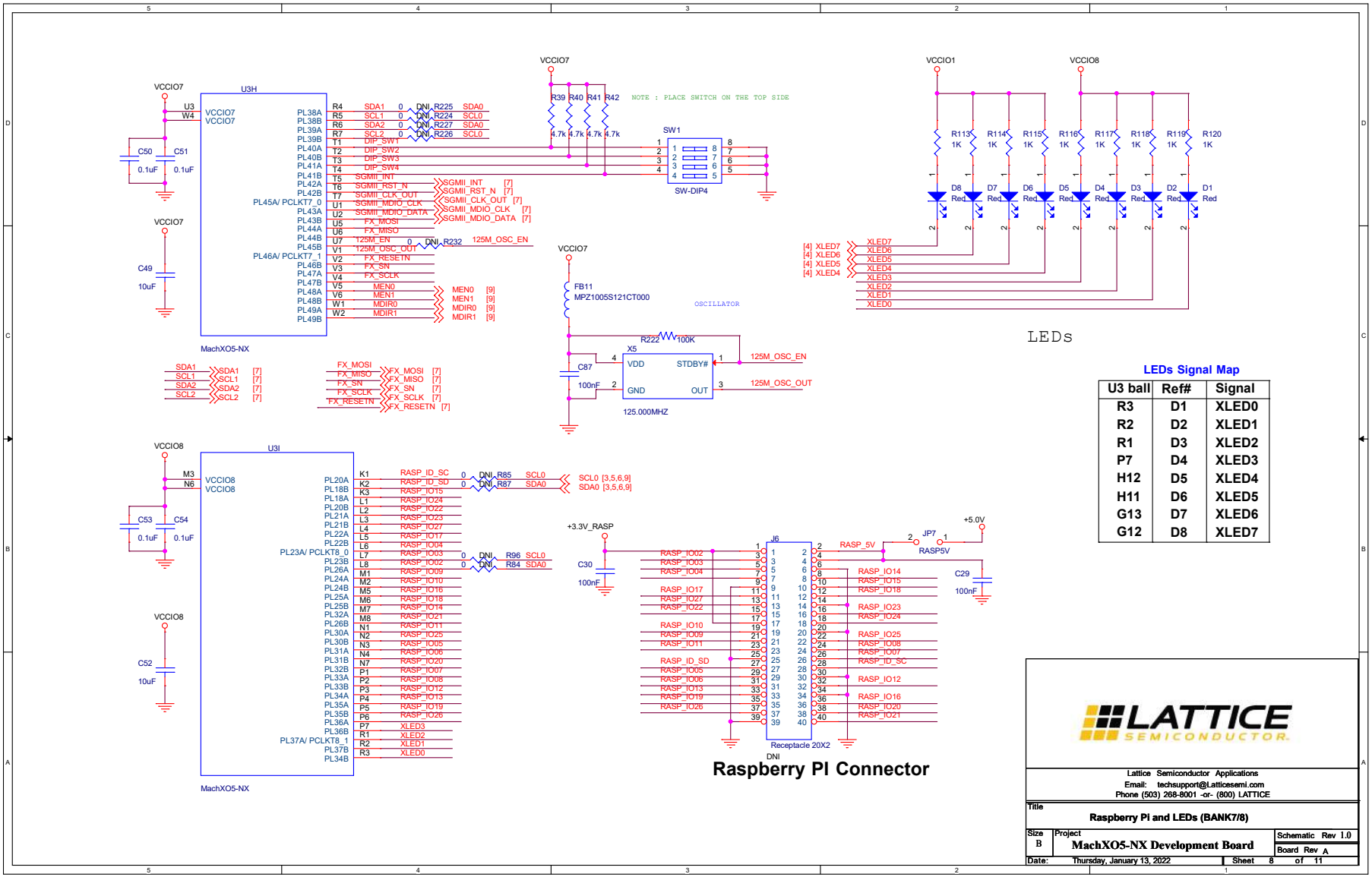

LEDs Signal Map

U3 ball	Ref#	Signal
R3	D1	XLED0
R2	D2	XLED1
R1	D3	XLED2
P7	D4	XLED3
H12	D5	XLED4
H11	D6	XLED5
G13	D7	XLED6
G12	D8	XLED7

Figure A. 8. Raspberry Pi and LEDs (BANK7/8)

© 2022 Lattice Semiconductor Corp. All Lattice trademarks, registered trademarks, patents, and disclaimers are as listed at www.latticesemi.com/legal.
All other brand or product names are trademarks or registered trademarks of their respective holders. The specifications and information herein are subject to change without notice.

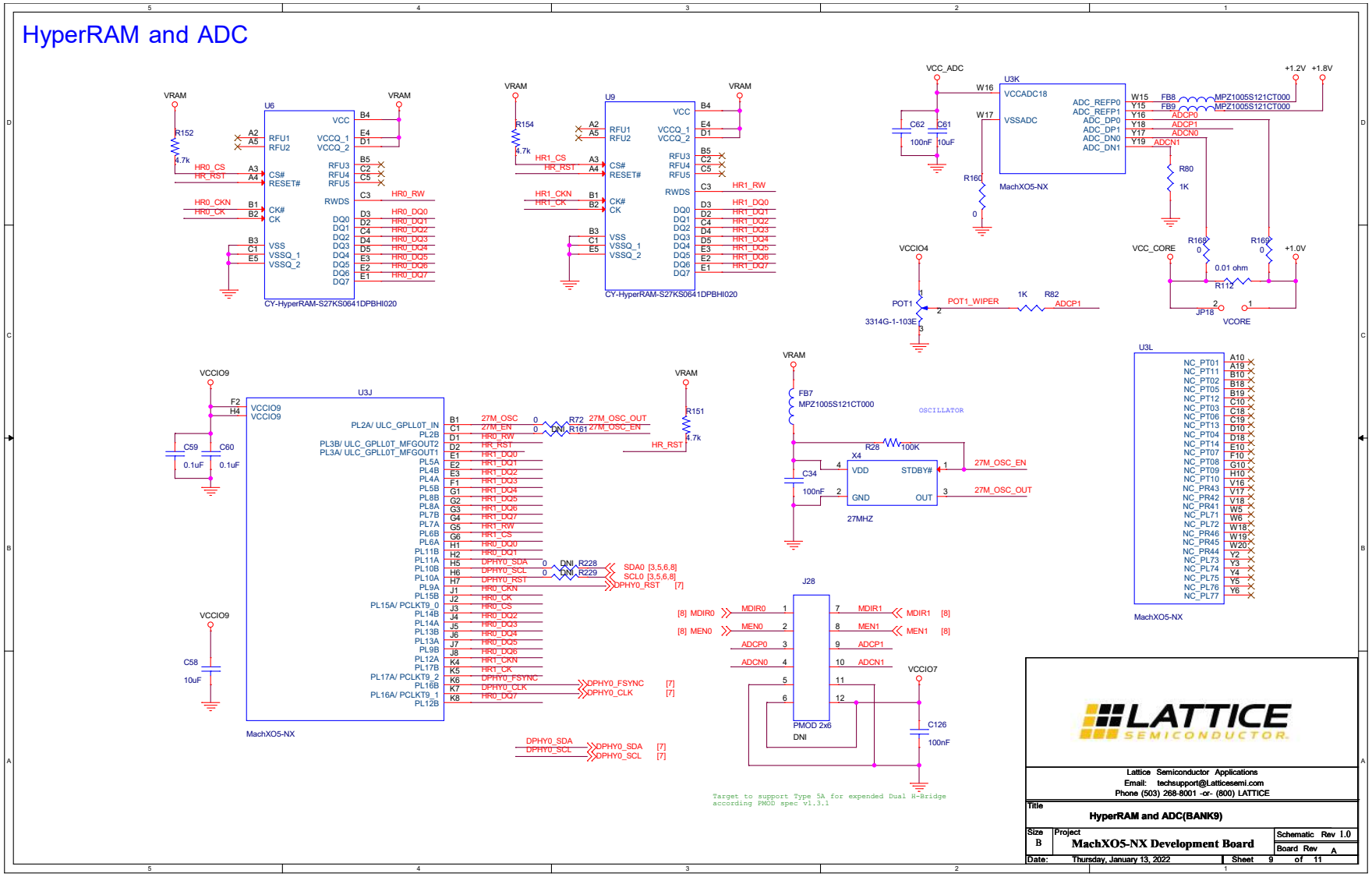

Figure A. 9. HyperRam and ADC (BANK9)

© 2022 Lattice Semiconductor Corp. All Lattice trademarks, registered trademarks, patents, and disclaimers are as listed at www.latticesemi.com/legal.
All other brand or product names are trademarks or registered trademarks of their respective holders. The specifications and information herein are subject to change without notice.

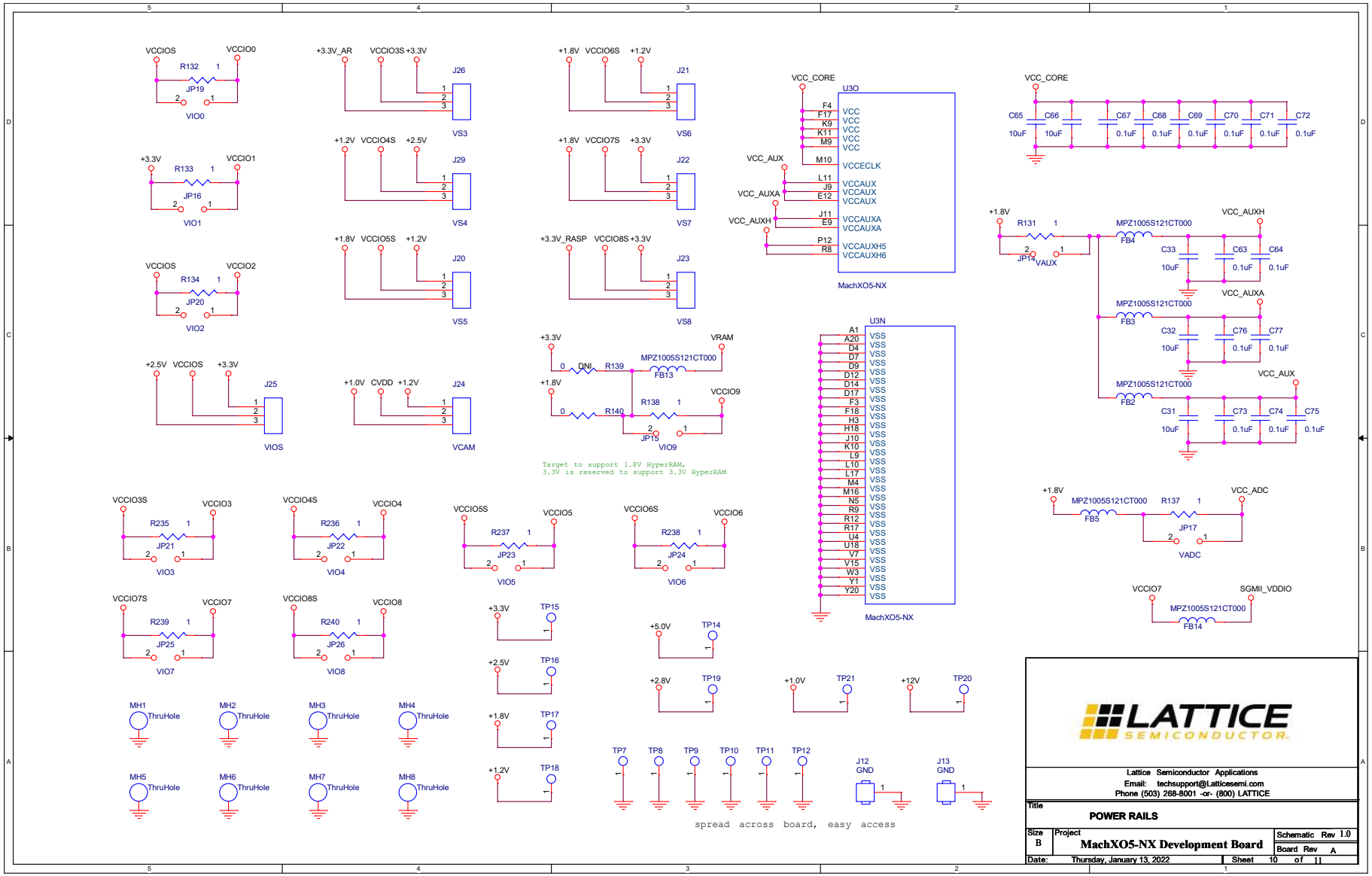

Figure A. 10. Power Rails

© 2022 Lattice Semiconductor Corp. All Lattice trademarks, registered trademarks, patents, and disclaimers are as listed at www.latticesemi.com/legal.
All other brand or product names are trademarks or registered trademarks of their respective holders. The specifications and information herein are subject to change without notice.

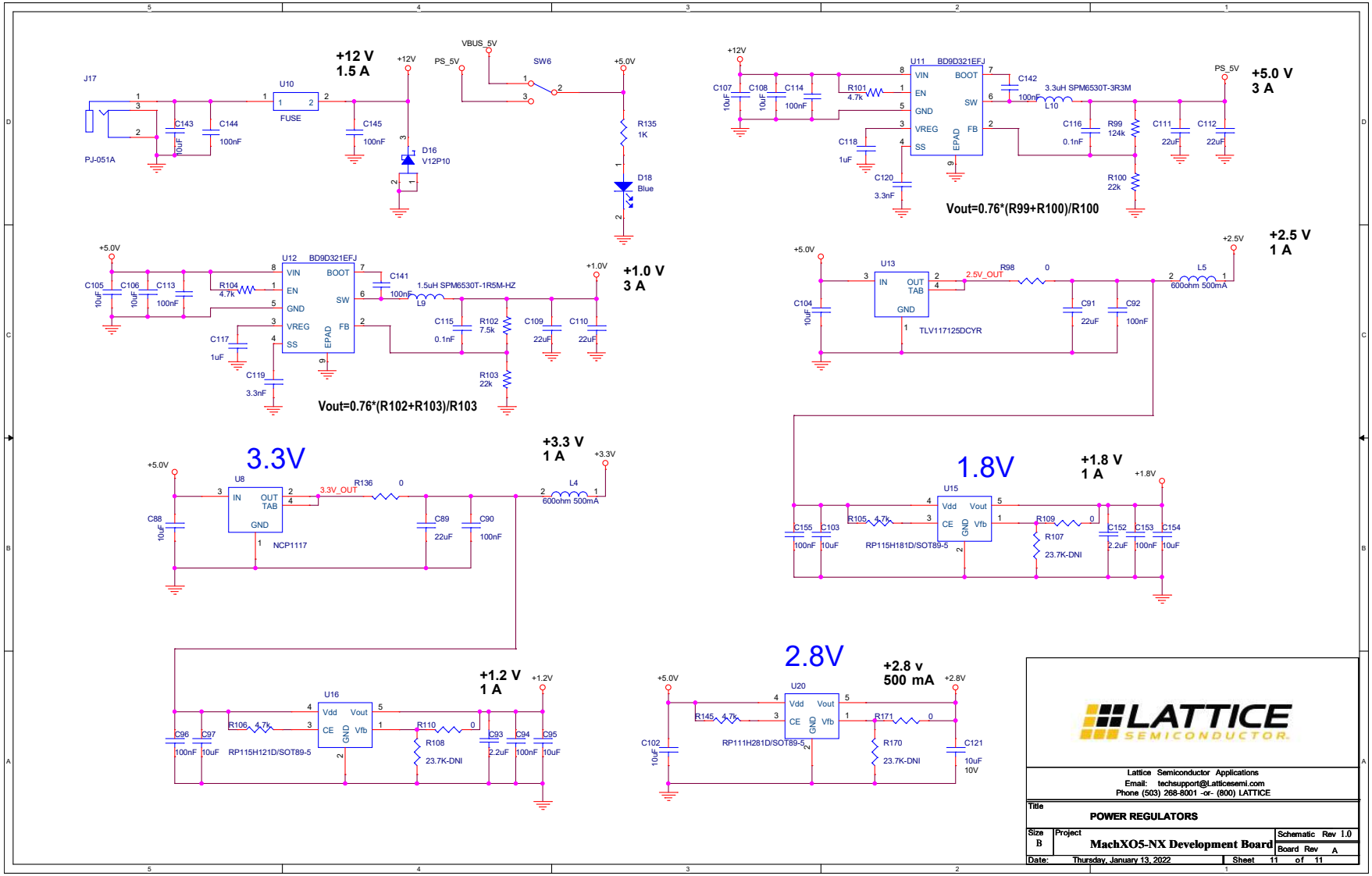

Figure A. 11. Power Regulators

© 2022 Lattice Semiconductor Corp. All Lattice trademarks, registered trademarks, patents, and disclaimers are as listed at www.latticesemi.com/legal.
All other brand or product names are trademarks or registered trademarks of their respective holders. The specifications and information herein are subject to change without notice.

Appendix B. MachXO5-NX Development Board Bill of Materials

Item	Reference	Qty	Part	PCB Footprint	Part Number	Manufacturer	Description	Assembly
1	AF11,AE11,AD11, AC11,AB11,AA11, AF12,AE12,AD12, AC12,AB12,AA12, AF13,AE13,AD13, AC13,AB13,AA13, AF14,AE14,AD14, AC14,AB14,AA14, AF15,AE15,AD15, AC15,AB15,AA15, AF20,AE20,AD20, AC20,AB20,AA20, AF21,AE21,AD21, AC21,AB21,AA21	42	T POINT R	TP	—	—	—	DNI
2	C1,C3,C129,C130	4	4.7uF	C0603	885012106005	Wurth	CAP CER 4.7UF 6.3V X5R 0603	—
3	C2,C4,C6,C7,C10,C11, C12,C13,C14,C17,C20, C21,C22,C23,C24,C25, C26,C27,C29,C30,C34, C62,C81,C85,C86,C87, C90,C92,C94,C96,C98, C99,C100,C101,C113, C114,C122,C123,C124, C125,C126,C127,C128, C131,C132,C133,C134, C135,C136,C140,C141, C142,C144,C145,C146, C147,C148,C149,C150, C151,C153,C155	62	100nF	C0402	GRM155R71H1 04KE14D	Murata	CAP CER 0.1UF 50V X7R 0402	—
4	C5,C31,C32,C33,C35, C39,C42,C45,C49,C52, C55,C58,C61,C65,C66, C78,C82,C95,C97,C103 ,C121,C137,C154,C156 ,C157,C166,C169,C172 ,C174,C178,C180	31	10uF	C0603	0603ZD106KAT 2A	KYOCERA AVX	CAP CER 10UF 10V X5R 0603	—
5	C8,C9,C18,C19,C28, C138,C139	7	18pF	C0402	C0402C180K3G ACTU	KEMET	CAP CER 18PF 25V NP0 0402	—
6	C15,C16	2	150pF	C0402	—	—	—	DNI
7	C36,C37,C38,C40,C41, C43,C44,C46,C47,C48, C50,C51,C53,C54,C56, C57,C59,C60,C63,C64, C67,C68,C69,C70,C71, C72,C73,C74,C75,C76, C77,C79,C80,C83,C84, C162,C163,C164,C165, C170,C171,C176,C177, C182,C183,C184	46	0.1uF	C0201	CC0201KRX5R8 BB104	YAGEO	CAP CER 0.1UF 25V X5R 0201	—

© 2022 Lattice Semiconductor Corp. All Lattice trademarks, registered trademarks, patents, and disclaimers are as listed at www.latticesemi.com/legal.
All other brand or product names are trademarks or registered trademarks of their respective holders. The specifications and information herein are subject to change without notice.

Item	Reference	Qty	Part	PCB Footprint	Part Number	Manufacturer	Description	Assembly
8	C88,C102,C104,C105, C106,C107,C108,C143	8	10uF	C1206	CL31B106KBH NNNE	Samsung	CAP CER 10UF 50V X7R 1206	—
9	C89,C91,C109,C110, C111,C112	6	22uF	C0603	CL10A226MO7 JZNC	Samsung	CAP CER 22UF 16V X5R 0603	—
10	C93,C152	2	2.2uF	RLP-133	CL21B225KPFN NNE	Samsung	CAP CER 2.2UF 10V X7R 0805	—
11	C115,C116	2	0.1nF	C0603	CC0603JRNPO9 BN101	YAGEO	CAP CER 100PF 50V C0G/NPO 0603	—
12	C117,C118,C158,C159, C160,C161,C167,C168, C173,C175,C179,C181, C185	13	1uF	C0603	CL10A105KO8 NNNC	Samsung	CAP CER 1UF 16V X5R 0603	—
13	C119,C120	2	3.3nF	C0201	GRM033R71A3 32JA01D	Murata	CAP CER 3300PF 10V X7R 0201	—
14	D1,D2,D3,D4,D5,D6, D7,D8,D9,D13,D14, D15	12	Red	led_0603	LTST-C190KRKT	LITE-On INC	LED RED CLEAR 0603 SMD	—
15	D10,D11	2	Green	led_0603	LTST-C190KGKT	LITE-On INC	LED GREEN CLEAR CHIP SMD	—
16	D12,D19	2	ESDR050 2N-UDFN6	UDFN6_0 40	ESDR0502NMU TBG	ON semi	TVS DIODE 5.5VWM 6UDFN	—
17	D16	1	V12P10	V12P10	V12P10-M3/87A	Vishay	DIODE SCHOTTKY 12A 100V SMPC TO-277A	—
18	D18	1	Blue	led_0603	LTST-C190TBKT	LITE-On INC	LED 468NM BLUE CLEAR 0603 SMD	—
19	D20	1	7-SEGMEN T	LED10-057-394-XZFMDK0 5A	XZFMDK05A	SunLED	DISPLAY 7-SEG 0.2" SGL RED 10SMD	—
20	D21	1	1N4448 W	1N4448W	1N4448WT	Onsemi	DIODE GEN PURP 75V 200MA SOD523F	—
21	FB1,FB2,FB3,FB4,FB5, FB6,FB7,FB8,FB9, FB10,FB11,FB12,FB13, FB14	14	MPZ100 5S121CT 000	MPZ1005 S121CT00 0	MPZ1005S121 CT000	TDK	FERRITE BEAD 120 OHM 0402 1LN	—
22	J1,J18	2	Header 1x8	hdr_amp_ 87220_8_ 1x8_100	22284081	Molex	CONN HEADER 8POS .100 VERT TIN	DNI

© 2022 Lattice Semiconductor Corp. All Lattice trademarks, registered trademarks, patents, and disclaimers are as listed at www.latticesemi.com/legal.
All other brand or product names are trademarks or registered trademarks of their respective holders. The specifications and information herein are subject to change without notice.

Item	Reference	Qty	Part	PCB Footprint	Part Number	Manufacturer	Description	Assembly
23	J2	1	Header 1x10	CONF1X10-254P_2612X240X850H_TH	10129378-910002BLF	Amphenol	CONN HEADER VERT 10POS 2.54MM	DNI
24	J3,J4	2	Header 1x8	CONF1X8-254P_2104X240X850H_TH	10129378-908002BLF	Amphenol	CONN HEADER VERT 8POS 2.54MM	DNI
25	J5	1	Header 1x6	CONF1X6-254P_1596X240X850H_TH	10129378-906002BLF	Amphenol	CONN HEADER VERT 6POS 2.54MM	DNI
26	J6	1	Receptacle 20X2	HDR254-2X20_socket	PPTC202LFBN-RC	Sullins	CONN HEADER FEM 40POS .1" DL TIN	DNI
27	J7	1	HEADER 5X2	HDR254-2X5_SHROUDED	30310-6002HB	3M	CONN HEADER 10POS DL STR GOLD	DNI
28	J8,J9	2	HDR40	HDR-20x2	PRPC020DFBN-RC	Sullins	CONN HEADER VERT 40POS 2.54MM	—
29	J10	1	SMA	bnc5-100-280t	5-1814832-1	TE Connectivity	CONN SMA JACK STR 50 OHM PCB	DNI
30	J11,J19	1	USB_MINI_B	usb2-0-rec-240-0001-9	UX60-MB-5ST	Hirose	CONN RECEPT MINI USB2.0 5POS	—
31	J12,J13	2	GND	TUR_TH	1573-2	Keystone Electronics	TERMINAL TURRET DBL .082"L	—
32	J14	1	7498111001-RJ45	RJ45-7498111001	7498111001	Wurth	CONN JACK 1PORT 1000 BASE-T SMD	—
33	J15,J16	2	PMOD 2x6	PPPC062LJBN-RC	PPPC062LJBN-RC	Sullins	CONN HDR 12POS 0.1 GOLD PCB R/A	—
34	J17	1	PJ-051A	PJ_051A	PJ-051A	CUI Device	CONN PWR JACK 2X5.5MM SOLDER	—
35	J20,J21,J22,J23,J24, J25,J26,J29	8	HDR1X3	HDR1X3	PRPC003SAAN-RC	Sullins	CONN HEADER VERT 3POS 2.54MM	—
36	J27	1	24580403000082 9+	245804030000829	245804030000829+	Kyocera AVX	CONN RCPT 30POS SMD	—

© 2022 Lattice Semiconductor Corp. All Lattice trademarks, registered trademarks, patents, and disclaimers are as listed at www.latticesemi.com/legal.
All other brand or product names are trademarks or registered trademarks of their respective holders. The specifications and information herein are subject to change without notice.

Item	Reference	Qty	Part	PCB Footprint	Part Number	Manufacturer	Description	Assembly
37	J28	1	PMOD 2x6	PPPC062LJBN-RC	PPPC062LJBN-RC	Sullins	CONN HDR 12POS 0.1 GOLD PCB R/A	DNI
38	JP1,JP2,JP3,JP4,JP5, JP6,JP7,JP8,JP9,JP10, JP11,JP12,JP13,JP14, JP15,JP16,JP17,JP18, JP19,JP20,JP21,JP22, JP23,JP24,JP25,JP26	26	JUMPER	Header_1x2	861400021YO2LF	Amphenol	CONN HEADER VERT 2POS 2.54MM	—
39	L1,L2,L3,L4,L5,L6,L7,L8	8	600ohm 500mA	fb0603	BLM18AG601SN1D	Murata	FERRITE CHIP 600 OHM 500MA 0603	—
40	L9	1	SPM6530T-1R5M	SPM6530T-2R2M	SPM6530T-1R5M100	TDK	FIXED IND 1.5UH 11A 10.67MOHM SM	—
41	L10	1	SPM6530T-3R3M	SPM6530T-2R2M	SPM6530T-3R3M-HZ	TDK	FIXED IND 3.3UH 6.8A 29.7MOHM SM	—
42	POT1	1	3314G-1-103E	sot23-3314G-1	3314G-1-103E	Bourns Inc.	TRIMMER 10K OHM 0.25W SMD	—
43	Q1,Q2,Q3,Q4,Q5	5	2N3904	MMBT3904	MMBT3904-7-F	Diodes	TRANS NPN 40V 0.2A SOT-23	—
44	R1,R2,R3,R39,R40, R41,R42,R46,R47,R48, R101,R104,R105,R106, R111,R141,R142,R143, R145,R148,R149,R150, R151,R152,R154,R155, R233,R234	28	4.7k	R0402	RT0402FRE074K7L	yageo	RES SMD 4.7K OHM 1% 1/16W 0402	—
45	R4,R5,R6,R7,R14,R15, R16,R17,R18,R20,R21, R22,R23,R24,R25,R31, R90,R91,R93,R95,R98, R136,R140,R160,R168, R169	26	0	R0603	RC0603FR-070RL	yageo	RES 0.0 OHM 1/10W JUMP 0603 SMD	—
46	R8,R9,R26,R27,R33, R34,R76,R77,R97, R157,R219,R220,R221	13	2.2k	R0402	RC0402FR-072K2L	yageo	RES 2.2K OHM 1% 1/16W 0402	—
47	R10,R19,R81,R83	4	12K	R0603	RC0603FR-0712KL	yageo	RES 12K OHM 1/10W 1% 0603 SMD	—
48	R11,R12,R13,R29,R73, R74,R121,R122,R123, R124,R126,R129	12	10K	R0402	RT0402FRE0710KL	yageo	RES SMD 10K OHM 1% 1/16W 0402	—
49	R28,R69,R164,R222	4	100K	R0402	AC0402FR-7W100KL	yageo	RES 100 KOHM 1% 1/8W 0402	—

© 2022 Lattice Semiconductor Corp. All Lattice trademarks, registered trademarks, patents, and disclaimers are as listed at www.latticesemi.com/legal.
All other brand or product names are trademarks or registered trademarks of their respective holders. The specifications and information herein are subject to change without notice.

Item	Reference	Qty	Part	PCB Footprint	Part Number	Manufacturer	Description	Assembly
50	R30,R35,R37,R43,R44, R45,R67,R68,R78,R79, R84,R85,R86,R87,R88, R92,R94,R96,R130, R139,R146,R147,R159, R161,R224,R225,R226, R227,R228,R229,R230, R231,R232	33	0	R0603	—	—	—	DNI
51	R32	1	11K	R0603	RT0603DRD07 11KL	yageo	RES SMD 11K OHM 0.5% 1/10W 0603	—
52	R36,R89,R203,R205	4	100	R0603	RC0603FR-07100RL	yageo	RES SMD 100 OHM 1% 1/10W 0603	—
53	R38	1	2.2k	R0402	—	—	—	DNI
54	R49,R50,R51,R52,R53, R54,R55,R56,R57,R58, R59,R60,R61,R62,R63, R64	16	100	R0201	—	—	—	DNI
55	R65,R66	2	2.49K	R0603	RT0603DRE072 K49L	yageo	RES SMD 2.49KOHM 0.5% 1/10W 0603	—
56	R70,R71,R72,R109,R11 0,R144,R162,R163,R17 1,R223	10	0	R0402	AC0402JR-070RL	yageo	RES SMD 0 OHM JUMPER 1/16W 0402	—
57	R75,R183,R184,R185, R186,R187,R188,R189, R190	9	22	R0603	RC0603FR-0722RL	yageo	RES SMD 22 OHM 1% 1/10W 0603	—
58	R80,R82,R113,R114, R115,R116,R117,R118, R119,R120,R125,R135, R156,R165,R166,R167	16	1k	R0402	AF0402FR-071KL	yageo	RES SMD 1K OHM 1% 1/16W 0402	—
59	R99	1	124K	R0603	RT0603DRD07 124KL	yageo	RES SMD 124K OHM 0.5% 1/10W 0603	—
60	R100,R103	2	22K	R0402	AC0402FR-0722KL	yageo	RES SMD 22K OHM 1% 1/16W 0402	—
61	R102	1	7.5k	R0603	RT0603DRD07 7K5L	yageo	RES SMD 7.5K OHM 0.5% 1/10W 0603	—
62	R107,R108,R170	3	23.7K-DNI	R0603	—	—	—	DNI
63	R112	1	10mOhm s	R0603	WSL0603R010 0FEA	Vishay	RES 0.01 OHM 1% 1/10W 0603	—
64	R131,R132,R133,R134, R137,R138,R235,R236, R237,R238,R239,R240	12	1	R0603	RT0603DRE071 RL	yageo	RES 1 OHM 0.5% 1/10W 0603	—
65	R158	1	1M Ohm	R0402	AC0402FR-071ML	yageo	RES SMD 1M OHM 1% 1/16W 0402	—

© 2022 Lattice Semiconductor Corp. All Lattice trademarks, registered trademarks, patents, and disclaimers are as listed at www.latticesemi.com/legal.
All other brand or product names are trademarks or registered trademarks of their respective holders. The specifications and information herein are subject to change without notice.

Item	Reference	Qty	Part	PCB Footprint	Part Number	Manufacturer	Description	Assembly
66	SW1	1	SW-DIP4	sw_sp_st_cts_195-4mst	195-4MST	CTS	SWITCH PIANO DIP SPST 50MA 24V	—
67	SW2,SW3,SW4,SW5	4	SYS_RST	sw_sp_st_eswitch_tl1015	TL1015AF160QG	E-Switch	SWITCH TACTILE SPST-NO 0.05A 12V	—
68	SW6	1	1101M2S2CQE2	SWITCH_3P-6A	1101M2S3CQE2	C&K	Slide Switches	—
69	TP1,TP2,TP3,TP4,TP5,TP6,TP7,TP8,TP9,TP10,TP11,TP12,TP14,TP15,TP16,TP17,TP18,TP19,TP20,TP21	20	T POINT R	TP	—	—	—	DNI
70	U1,U18	2	FT2232HL	tqfp64_0p5_12p2x12p2_h1p6	FT2232HL-TRAY	FTDI	IC USB HS DUAL UART/FIFO 64-LQFP	—
71	U2,U19	2	93LC56C-I/SN	so8_50_244	93LC56C-I/SN	Microchip	IC EEPROM 2KBIT 3MHZ 8SOIC	—
72	U3	1	JEDI_D6_Final	BGA400-080-17X17-SOCKET	LFMXO5-25-9BBG400C	Lattice	Target Device	—
73	U4,U5	2	Hirose - FX12 - 40 Pos	Hirose-FX12	FX12B-40P-0.4SV	Hirose	CONN PLUG 40POS 0.4MM SMD SHIELD	—
74	U6,U9	2	CY-HyperRAM-S27KS0641DPBHI020	24FBGA_S27KS	S27KS0641DPBHI020	Cypress	IC PSRAM 64MBIT PARALLEL 24FBGA	—
75	U7	1	DP83867ERGZT	48VQFN_DP83867	DP83867ERGZT	TI	IC ETHERNET PHY 48VQFN	*
76	U8	1	NCP1117	sot223_4p	NCP1117ST33T3G	ON semi	IC REG LDO 3.3V 1A SOT223	—
77	U10	1	FUSE	0154004DRT	01571.25DR	Littelfuse	Fuse 260C 1.25A VFA NANO Clip	—
78	U11,U12	2	BD9D321EFJ	HTSOP_8_BD9D321	BD9D321EFJ-E2	Rohm	IC REG BUCK ADJ 3A 8HTSOP-J	—
79	U13	1	TLV117125DCYR	sot223_4p	TLV117125DCYR	TI	IC REG LINEAR 2.5V 1A SOT223-4	—
80	U14	1	SN74AVC4T774	tssop16-0p65mm	SN74AVC4T774PWR	TI	IC TRNSLTR BIDIRECTIONAL 16TSSOP	—

© 2022 Lattice Semiconductor Corp. All Lattice trademarks, registered trademarks, patents, and disclaimers are as listed at www.latticesemi.com/legal.
All other brand or product names are trademarks or registered trademarks of their respective holders. The specifications and information herein are subject to change without notice.

Item	Reference	Qty	Part	PCB Footprint	Part Number	Manufacturer	Description	Assembly
81	U15	1	RP115H181D/SOT89-5	SOT89-5	RP115H181D-T1-FE	RICOH	IC REG LINEAR 1.8V 1A SOT89-5	—
82	U16	1	RP115H121D/SOT89-5	SOT89-5	RP115H121D-T1-FE	RICOH	IC REG LINEAR 1.2V 1A SOT89-5	—
83	U20	1	RP111H281D/SOT89-5	SOT89-5	RP111H281D-T1-FE	RICOH	IC REG LINEAR 2.8V 1A SOT89-5	—
84	X1,X2	2	7M-12.000MAAJ	xtal_4p_7m	7M-12.000MAAJ-T	TXC	CRYSTAL 12MHZ 18PF SMD	—
85	X3	1	ABM3-25	XTAL_ABM3	ABM7-25.000MHZ-D2Y-T	Abracon LLC	CRYSTAL 25.0000MHZ 18PF SMD	—
86	X4	1	DSC1001DE2-027.0000	x4-2520	DSC1001DE2-027.0000	Abracon LLC	MEMS OSC XO 27.0000MHZ CMOS SMD	—
87	X5	1	125.000MHZ	crystal_4p_7050	DSC1001AE5-125.0000	Microchip	MEMS OSC XO 125.0000MHZ CMOS SMD	—
88	—	1	—	—	—	Pctron	—	—

***Note:** The MachXO5™-NX Development Board, OPN of which is LFMXO5-25-EVN, is delivered without the Ethernet PHY due to long lead time.

© 2022 Lattice Semiconductor Corp. All Lattice trademarks, registered trademarks, patents, and disclaimers are as listed at www.latticesemi.com/legal.
All other brand or product names are trademarks or registered trademarks of their respective holders. The specifications and information herein are subject to change without notice.

Appendix C. User Defined Preference File Listing

```
// These names follow the MachXO5™-NX Development Board schematic but,
// they may be defined by the user.  Thus, they can be copied into the
// preference file and edited to match a different naming convention if
// needed or used to fill in the Spreadsheet view.

// MachXO5-25 LED Connections
// Note: The following order matches the LED locations on the board
// from top D1 to bottom D8
ldc_set_location -site {R3} [get_ports {LED[0]}]
ldc_set_location -site {R2} [get_ports {LED[1]}]
ldc_set_location -site {R1} [get_ports {LED[2]}]
ldc_set_location -site {P7} [get_ports {LED[3]}]
ldc_set_location -site {H12} [get_ports {LED[4]}]
ldc_set_location -site {H11} [get_ports {LED[5]}]
ldc_set_location -site {G13} [get_ports {LED[6]}]
ldc_set_location -site {G12} [get_ports {LED[7]}]

//DIP Switch Connections
ldc_set_location -site {T1} [get_ports {DIPSW[0]}]
ldc_set_location -site {T2} [get_ports {DIPSW[1]}]
ldc_set_location -site {T3} [get_ports {DIPSW[2]}]
ldc_set_location -site {T4} [get_ports {DIPSW[3]}]

//Push Button Connections
ldc_set_location -site {E19} [get_ports PB1]
ldc_set_location -site {F20} [get_ports PB2]
ldc_set_location -site {B7}  [get_ports PB3]
ldc_set_location -site {G20} [get_ports PB4]

//Clock inputs
ldc_set_location -site {E14} [get_ports CLK_12MHz]
ldc_set_location -site {T7}  [get_ports CLK_25MHz]
ldc_set_location -site {B1}  [get_ports CLK_27MHz]
ldc_set_location -site {V1}  [get_ports CLK_125MHz]
ldc_set_location -site {D19} [get_ports CLK_EXT]

//SEG LED Connections
ldc_set_location -site {A18} [get_ports SEG_LED_DP]
ldc_set_location -site {A17} [get_ports SEG_LED_G]
ldc_set_location -site {A16} [get_ports SEG_LED_F]
ldc_set_location -site {A15} [get_ports SEG_LED_E]
ldc_set_location -site {F11} [get_ports SEG_LED_D]
ldc_set_location -site {E15} [get_ports SEG_LED_C]
ldc_set_location -site {G11} [get_ports SEG_LED_B]
ldc_set_location -site {F14} [get_ports SEG_LED_A]

//HyperRAM
ldc_set_location -site {D2} [get_ports ram0_1_rst]
ldc_set_location -site {J2} [get_ports ram0_ck_p]
ldc_set_location -site {J1} [get_ports ram0_ck_n]
ldc_set_location -site {J3} [get_ports ram0_cs]
ldc_set_location -site {H1} [get_ports ram0_dq0]
ldc_set_location -site {H2} [get_ports ram0_dq1]
ldc_set_location -site {J4} [get_ports ram0_dq2]
ldc_set_location -site {J5} [get_ports ram0_dq3]
```

© 2022 Lattice Semiconductor Corp. All Lattice trademarks, registered trademarks, patents, and disclaimers are as listed at www.latticesemi.com/legal.
All other brand or product names are trademarks or registered trademarks of their respective holders. The specifications and information herein are subject to change without notice.

```
ldc_set_location -site {J6} [get_ports ram0_dq4]
ldc_set_location -site {J7} [get_ports ram0_dq5]
ldc_set_location -site {J8} [get_ports ram0_dq6]
ldc_set_location -site {K8} [get_ports ram0_dq7]
ldc_set_location -site {D1} [get_ports ram0_rw]
ldc_set_location -site {K5} [get_ports ram1_ck_p]
ldc_set_location -site {K4} [get_ports ram1_ck_n]
ldc_set_location -site {G6} [get_ports ram1_cs]
ldc_set_location -site {E1} [get_ports ram1_dq0]
ldc_set_location -site {E2} [get_ports ram1_dq1]
ldc_set_location -site {E3} [get_ports ram1_dq2]
ldc_set_location -site {F1} [get_ports ram1_dq3]
ldc_set_location -site {G1} [get_ports ram1_dq4]
ldc_set_location -site {G2} [get_ports ram1_dq5]
ldc_set_location -site {G3} [get_ports ram1_dq6]
ldc_set_location -site {G4} [get_ports ram1_dq7]
ldc_set_location -site {G5} [get_ports ram1_rw]

//PMOD0 Connections
ldc_set_location -site {G7} [get_ports PMOD0_1]
ldc_set_location -site {G9} [get_ports PMOD0_2]
ldc_set_location -site {G8} [get_ports PMOD0_3]
ldc_set_location -site {H8} [get_ports PMOD0_4]
ldc_set_location -site {F7} [get_ports PMOD0_5]
ldc_set_location -site {F9} [get_ports PMOD0_6]
ldc_set_location -site {F8} [get_ports PMOD0_7]
ldc_set_location -site {H9} [get_ports PMOD0_8]

//PMOD1 Connections
ldc_set_location -site {E11} [get_ports PMOD1_1]
ldc_set_location -site {D13} [get_ports PMOD1_2]
ldc_set_location -site {D15} [get_ports PMOD1_3]
ldc_set_location -site {C16} [get_ports PMOD1_4]
ldc_set_location -site {D11} [get_ports PMOD1_5]
ldc_set_location -site {C13} [get_ports PMOD1_6]
ldc_set_location -site {C15} [get_ports PMOD1_7]
ldc_set_location -site {D16} [get_ports PMOD1_8]

//USER JTAG Connections
ldc_set_location -site {A11} [get_ports UTDI]
ldc_set_location -site {A12} [get_ports UTDO]
ldc_set_location -site {A13} [get_ports UTMS]
ldc_set_location -site {A14} [get_ports UTCK]

//USER RS232 Connections
ldc_set_location -site {B11} [get_ports RS232_Rx_TTL]
ldc_set_location -site {B12} [get_ports RS232_Tx_TTL]
ldc_set_location -site {B13} [get_ports RTSn]
ldc_set_location -site {B14} [get_ports CTSn]
ldc_set_location -site {B15} [get_ports DTRn]
ldc_set_location -site {B16} [get_ports DSRn]
ldc_set_location -site {B17} [get_ports DCDn]
ldc_set_location -site {C11} [get_ports RI]

//RASPBERRY PI Connections
ldc_set_location -site {L8} [get_ports RASP_IO02]
ldc_set_location -site {L7} [get_ports RASP_IO03]
ldc_set_location -site {L6} [get_ports RASP_IO04]
```

© 2022 Lattice Semiconductor Corp. All Lattice trademarks, registered trademarks, patents, and disclaimers are as listed at www.latticesemi.com/legal.
All other brand or product names are trademarks or registered trademarks of their respective holders. The specifications and information herein are subject to change without notice.

```
ldc_set_location -site {N3} [get_ports RASP_IO05]
ldc_set_location -site {N4} [get_ports RASP_IO06]
ldc_set_location -site {P1} [get_ports RASP_IO07]
ldc_set_location -site {P2} [get_ports RASP_IO08]
ldc_set_location -site {M1} [get_ports RASP_IO09]
ldc_set_location -site {M2} [get_ports RASP_IO10]
ldc_set_location -site {N1} [get_ports RASP_IO11]
ldc_set_location -site {P3} [get_ports RASP_IO12]
ldc_set_location -site {P4} [get_ports RASP_IO13]
ldc_set_location -site {M7} [get_ports RASP_IO14]
ldc_set_location -site {K3} [get_ports RASP_IO15]
ldc_set_location -site {M5} [get_ports RASP_IO16]
ldc_set_location -site {L5} [get_ports RASP_IO17]
ldc_set_location -site {M6} [get_ports RASP_IO18]
ldc_set_location -site {P5} [get_ports RASP_IO19]
ldc_set_location -site {N7} [get_ports RASP_IO20]
ldc_set_location -site {M8} [get_ports RASP_IO21]
ldc_set_location -site {L2} [get_ports RASP_IO22]
ldc_set_location -site {L3} [get_ports RASP_IO23]
ldc_set_location -site {L1} [get_ports RASP_IO24]
ldc_set_location -site {N2} [get_ports RASP_IO25]
ldc_set_location -site {P6} [get_ports RASP_IO26]
ldc_set_location -site {L4} [get_ports RASP_IO27]
ldc_set_location -site {K1} [get_ports RASP_ID_SC]
ldc_set_location -site {K2} [get_ports RASP_ID_SD]

//VERSA HEADER Connections
ldc_set_location -site {D3} [get_ports EXPCON_IO0]
ldc_set_location -site {E4} [get_ports EXPCON_IO1]
ldc_set_location -site {C3} [get_ports EXPCON_IO2]
ldc_set_location -site {C2} [get_ports EXPCON_IO3]
ldc_set_location -site {A4} [get_ports EXPCON_IO4]
ldc_set_location -site {E5} [get_ports EXPCON_IO5]
ldc_set_location -site {F6} [get_ports EXPCON_IO6]
ldc_set_location -site {C5} [get_ports EXPCON_IO7]
ldc_set_location -site {B2} [get_ports EXPCON_IO8]
ldc_set_location -site {A2} [get_ports EXPCON_IO9]
ldc_set_location -site {B3} [get_ports EXPCON_IO10]
ldc_set_location -site {A3} [get_ports EXPCON_IO11]
ldc_set_location -site {B4} [get_ports EXPCON_IO12]
ldc_set_location -site {D5} [get_ports EXPCON_IO13]
ldc_set_location -site {A5} [get_ports EXPCON_IO14]
ldc_set_location -site {B5} [get_ports EXPCON_IO15]
ldc_set_location -site {A6} [get_ports EXPCON_IO16]
ldc_set_location -site {B6} [get_ports EXPCON_IO17]
ldc_set_location -site {A7} [get_ports EXPCON_IO18]
ldc_set_location -site {A8} [get_ports EXPCON_IO19]
ldc_set_location -site {C6} [get_ports EXPCON_IO20]
ldc_set_location -site {B8} [get_ports EXPCON_IO21]
ldc_set_location -site {B9} [get_ports EXPCON_IO22]
ldc_set_location -site {A9} [get_ports EXPCON_IO23]
ldc_set_location -site {D6} [get_ports EXPCON_IO24]
ldc_set_location -site {C8} [get_ports EXPCON_IO25]
ldc_set_location -site {E7} [get_ports EXPCON_IO26]
ldc_set_location -site {E8} [get_ports EXPCON_IO27]
ldc_set_location -site {E6} [get_ports EXPCON_IO28]
ldc_set_location -site {C20} [get_ports EXPCON_IO29]
ldc_set_location -site {H14} [get_ports EXPCON_IO30]
```

© 2022 Lattice Semiconductor Corp. All Lattice trademarks, registered trademarks, patents, and disclaimers are as listed at www.latticesemi.com/legal.
All other brand or product names are trademarks or registered trademarks of their respective holders. The specifications and information herein are subject to change without notice.

```
ldc_set_location -site {G14} [get_ports EXPCON_IO31]
ldc_set_location -site {H15} [get_ports EXPCON_IO32]
ldc_set_location -site {G18} [get_ports EXPCON_IO33]
ldc_set_location -site {H16} [get_ports EXPCON_IO34]
ldc_set_location -site {G19} [get_ports EXPCON_IO35]
ldc_set_location -site {H20} [get_ports EXPCON_IO36]
ldc_set_location -site {H19} [get_ports EXPCON_IO37]
ldc_set_location -site {J17} [get_ports EXPCON_IO38]
ldc_set_location -site {J18} [get_ports EXPCON_IO39]
ldc_set_location -site {J15} [get_ports EXPCON_IO40]
ldc_set_location -site {J16} [get_ports EXPCON_IO41]
ldc_set_location -site {J13} [get_ports EXPCON_IO42]
ldc_set_location -site {J14} [get_ports EXPCON_IO43]
ldc_set_location -site {J12} [get_ports EXPCON_IO44]
ldc_set_location -site {H13} [get_ports EXPCON_IO45]
ldc_set_location -site {E16} [get_ports EXPCON_OSC]
ldc_set_location -site {E17} [get_ports EXPCON_CLKIN]
ldc_set_location -site {D20} [get_ports EXPCON_CLKOUT]
ldc_set_location -site {F5} [get_ports HPE_RESOUT#]
ldc_set_location -site {D8} [get_ports HPE_CARDSEL#]

//Aardvark Header Connections
ldc_set_location -site {M19} [get_ports AK_SCL]
ldc_set_location -site {M20} [get_ports AK_SDA]
ldc_set_location -site {N14} [get_ports AK_MISO]
ldc_set_location -site {N15} [get_ports AK_SCLK]
ldc_set_location -site {N16} [get_ports AK_SS]
ldc_set_location -site {N17} [get_ports AK_MOSI]


//Arduino Header Connections
ldc_set_location -site {J19} [get_ports AR_IO0]
ldc_set_location -site {J20} [get_ports AR_IO1]
ldc_set_location -site {K12} [get_ports AR_IO2]
ldc_set_location -site {K13} [get_ports AR_IO3]
ldc_set_location -site {K14} [get_ports AR_IO4]
ldc_set_location -site {K15} [get_ports AR_IO5]
ldc_set_location -site {K16} [get_ports AR_IO6]
ldc_set_location -site {K17} [get_ports AR_IO7]
ldc_set_location -site {L12} [get_ports AR_IO8]
ldc_set_location -site {L13} [get_ports AR_IO9]
ldc_set_location -site {L14} [get_ports AR_SS_IO10]
ldc_set_location -site {L15} [get_ports AR_MOSI_IO11]
ldc_set_location -site {L16} [get_ports AR_MISO_IO12]
ldc_set_location -site {K19} [get_ports AR_SCK_IO13]
ldc_set_location -site {L20} [get_ports AR_IO14]
ldc_set_location -site {N18} [get_ports AR_SDA]
ldc_set_location -site {N19} [get_ports AR_SCL]
ldc_set_location -site {K20} [get_ports AR_RESET]
ldc_set_location -site {M11} [get_ports AR_AD0]
ldc_set_location -site {M12} [get_ports AR_AD1]
ldc_set_location -site {M13} [get_ports AR_AD2]
ldc_set_location -site {M14} [get_ports AR_AD3]
ldc_set_location -site {M17} [get_ports AR_AD4]
ldc_set_location -site {M18} [get_ports AR_AD5]
```

© 2022 Lattice Semiconductor Corp. All Lattice trademarks, registered trademarks, patents, and disclaimers are as listed at www.latticesemi.com/legal.
All other brand or product names are trademarks or registered trademarks of their respective holders. The specifications and information herein are subject to change without notice.

Appendix D. MachXO5-NX Development Board Revision Information

MachXO5-NX Development Board – Working with Revision A

BOM Difference of Revision A Board

Feature Variations	Without Ethernet	With Ethernet	Application Notes
Major Identification	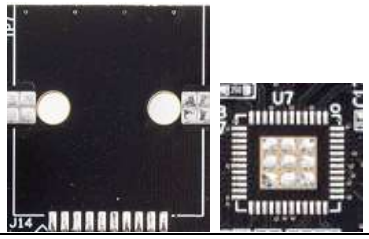	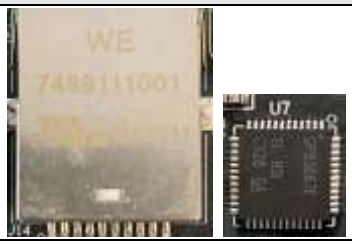	J14 – Top View U7 – Bottom View
BOM Difference	J14 and U7 NOT installed	Production version, BOM full populated according to Appendix B	Caused by BOM supply issues
OPN	LFMXO5-25-EVN	LFMXO5-25-E-EVN	Both PCB printed: P/N: LFMXO5-25-EVN

© 2022 Lattice Semiconductor Corp. All Lattice trademarks, registered trademarks, patents, and disclaimers are as listed at www.latticesemi.com/legal.
All other brand or product names are trademarks or registered trademarks of their respective holders. The specifications and information herein are subject to change without notice.

References

For more information, refer to the following documents:

- MachXO5 Programming and Configuration User Guide (FPGA-TN-02271)
- Programming Cable User Guide (FPGA-UG-02042)

© 2022 Lattice Semiconductor Corp. All Lattice trademarks, registered trademarks, patents, and disclaimers are as listed at www.latticesemi.com/legal.
All other brand or product names are trademarks or registered trademarks of their respective holders. The specifications and information herein are subject to change without notice.

Revision History

Revision 1.1, December 2022

Section	Change Summary
Generating the Programming File	Newly added section.
Programming the MachXO5-NX Device	

Revision 1.0, June 2022

Section	Change Summary
All	Production release.

Revision 0.90, May 2022

Section	Change Summary
All	Preliminary release.

© 2022 Lattice Semiconductor Corp. All Lattice trademarks, registered trademarks, patents, and disclaimers are as listed at www.latticesemi.com/legal.
All other brand or product names are trademarks or registered trademarks of their respective holders. The specifications and information herein are subject to change without notice.

www.latticesemi.com