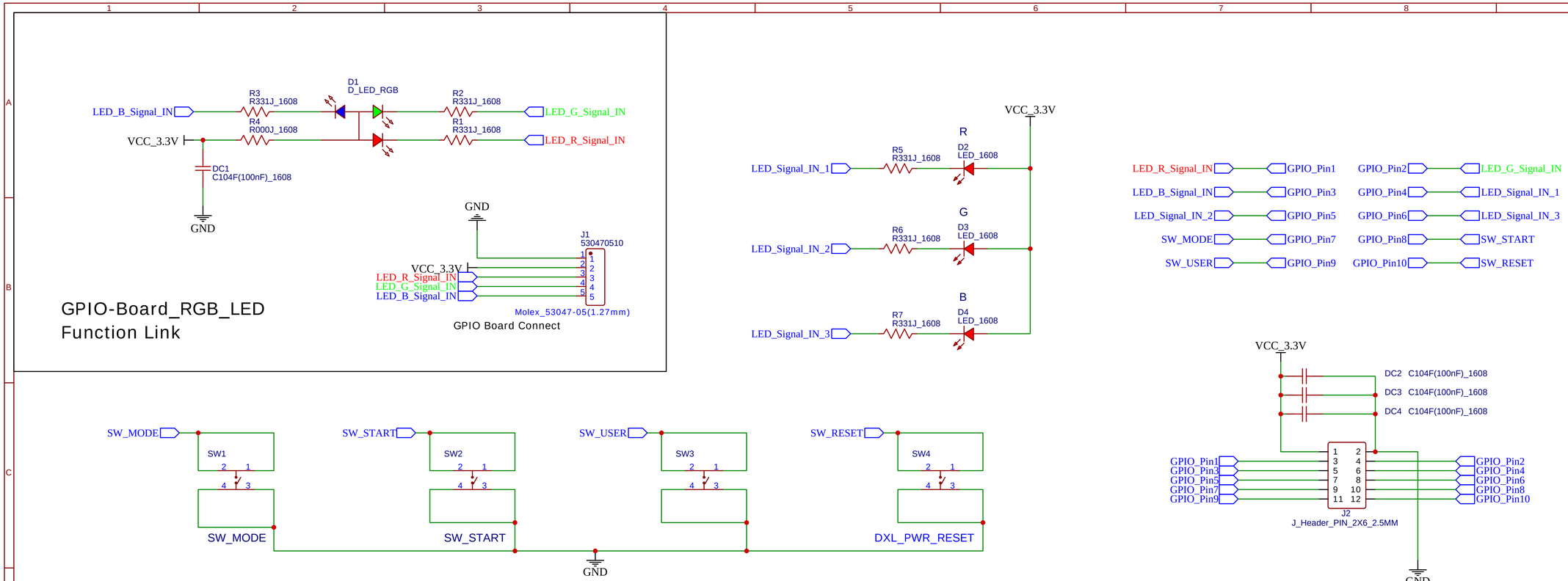

TITLE: Sheet_1		REV: 1.0
嘉立创EDA	Company: ROBOTIIK FILKOM UB	Sheet: 1/1
	Date: 2022-10-05 Drawn By: bimaaa	