Lab 04 - Data Acquisition (DAQ)

Group 1b.b2

E/20/157 – S.M.B.G. Janakantha

E/20/158 – T.G.C. Jananga

E/20/168 – B.V.R.R. Jayasinghe

CO326 – Industrial Networks

2026-02-11

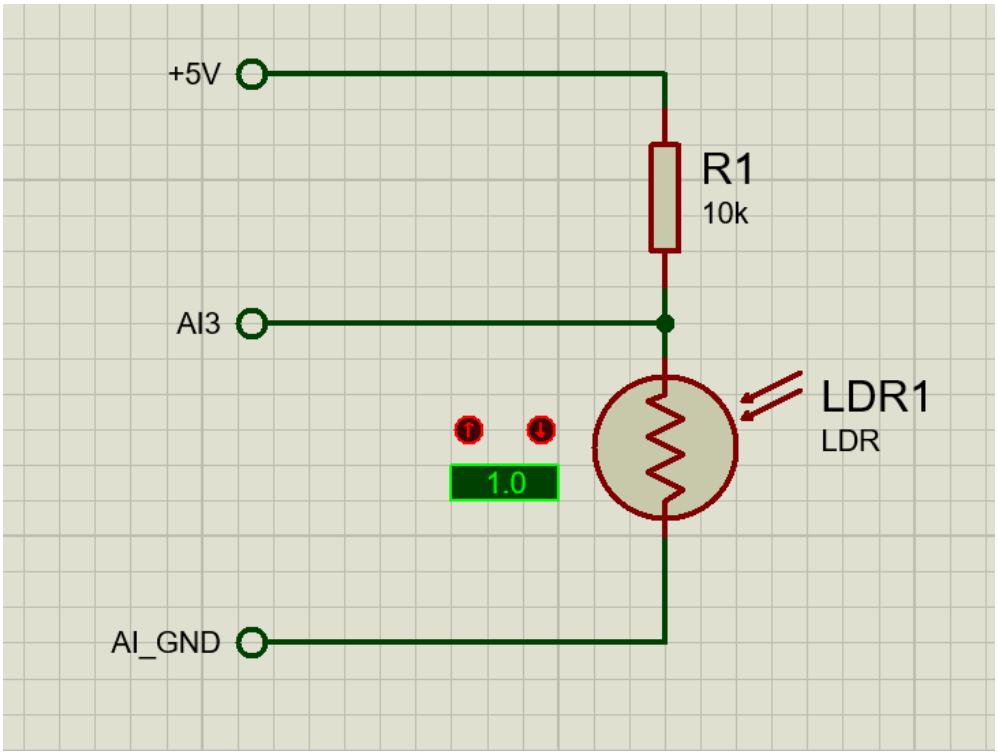

Figure 1: Circuit Diagram

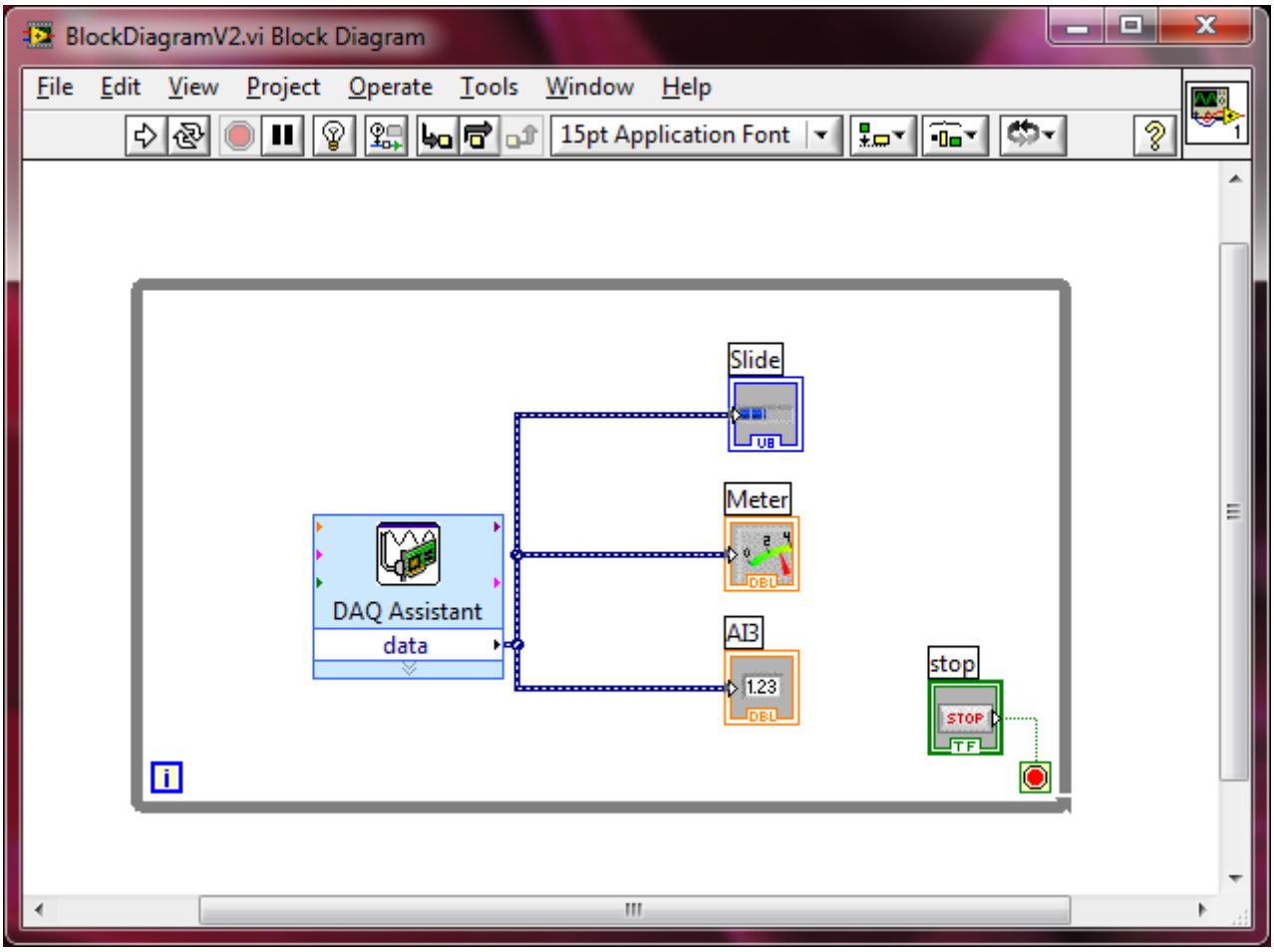

Figure 2: Block Diagram of LabVIEW

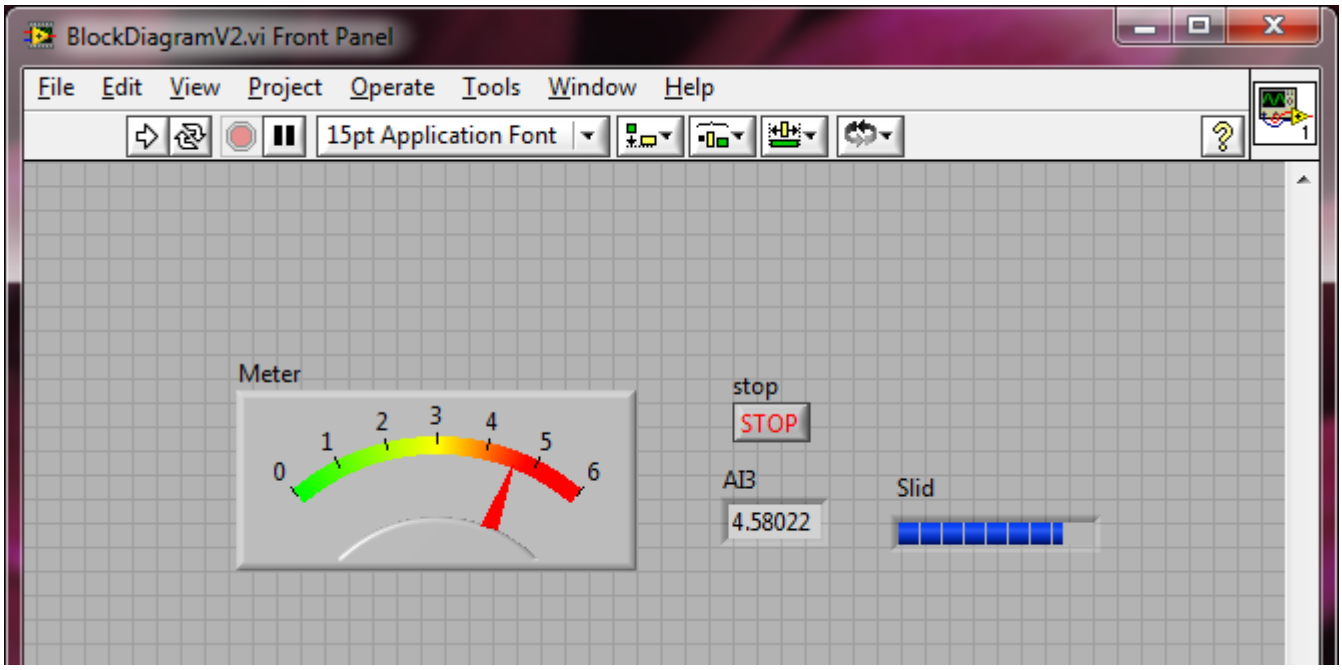

Figure 3: Front Panel of LabVIEW

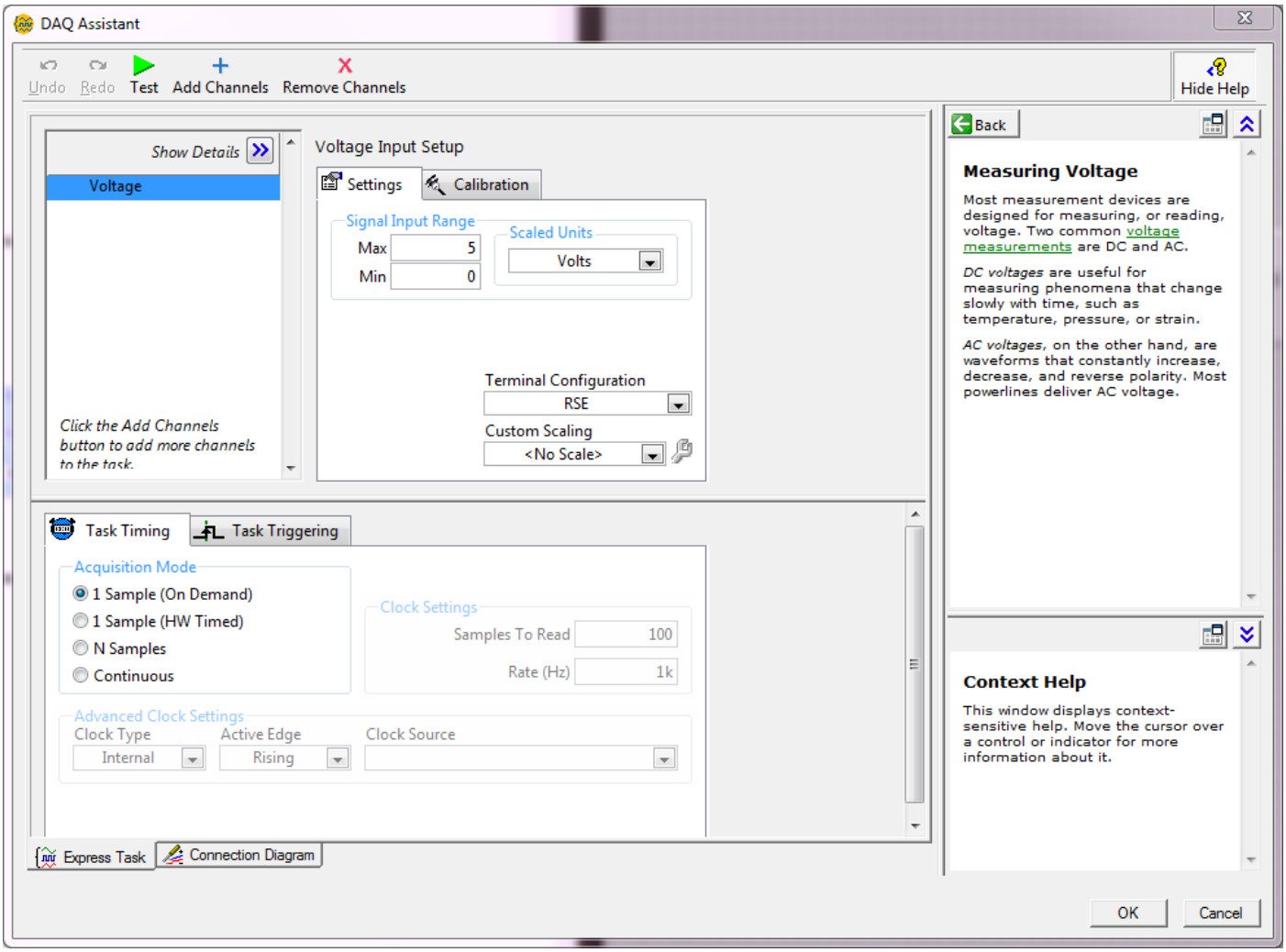

Figure 4: DAQ Assistant Properties

Pins used

- Pin 67 – AI GND
- Pin 30 – AI3
- Pin 8 – +5V

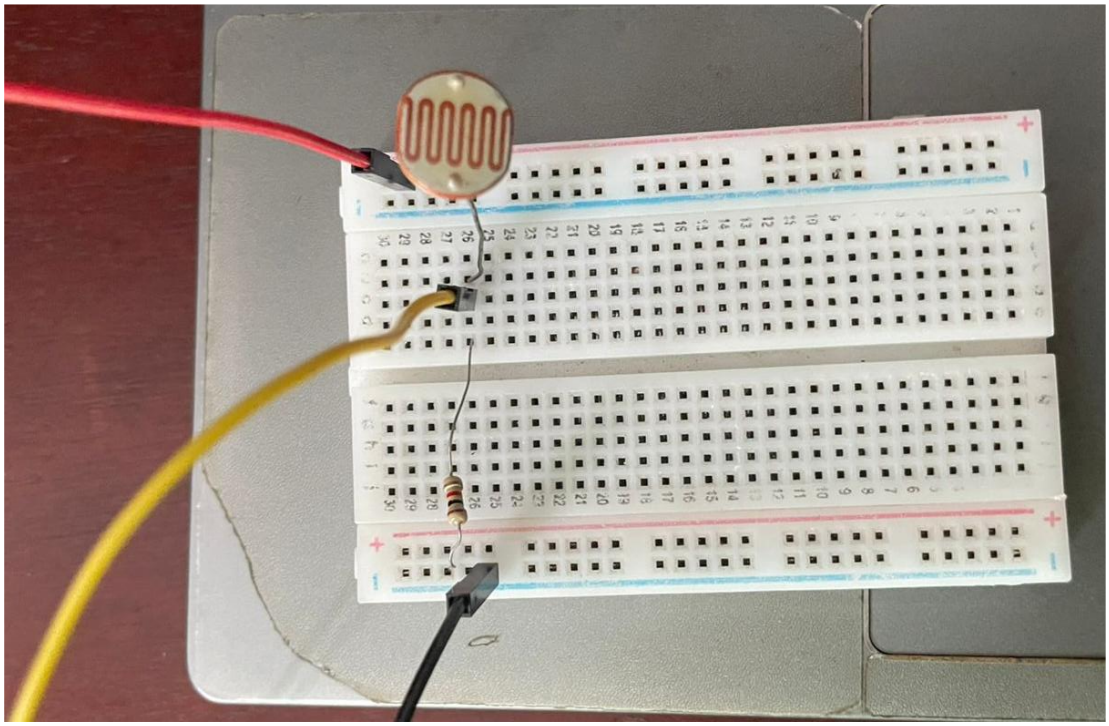

Figure 5: Physical Lab Setup