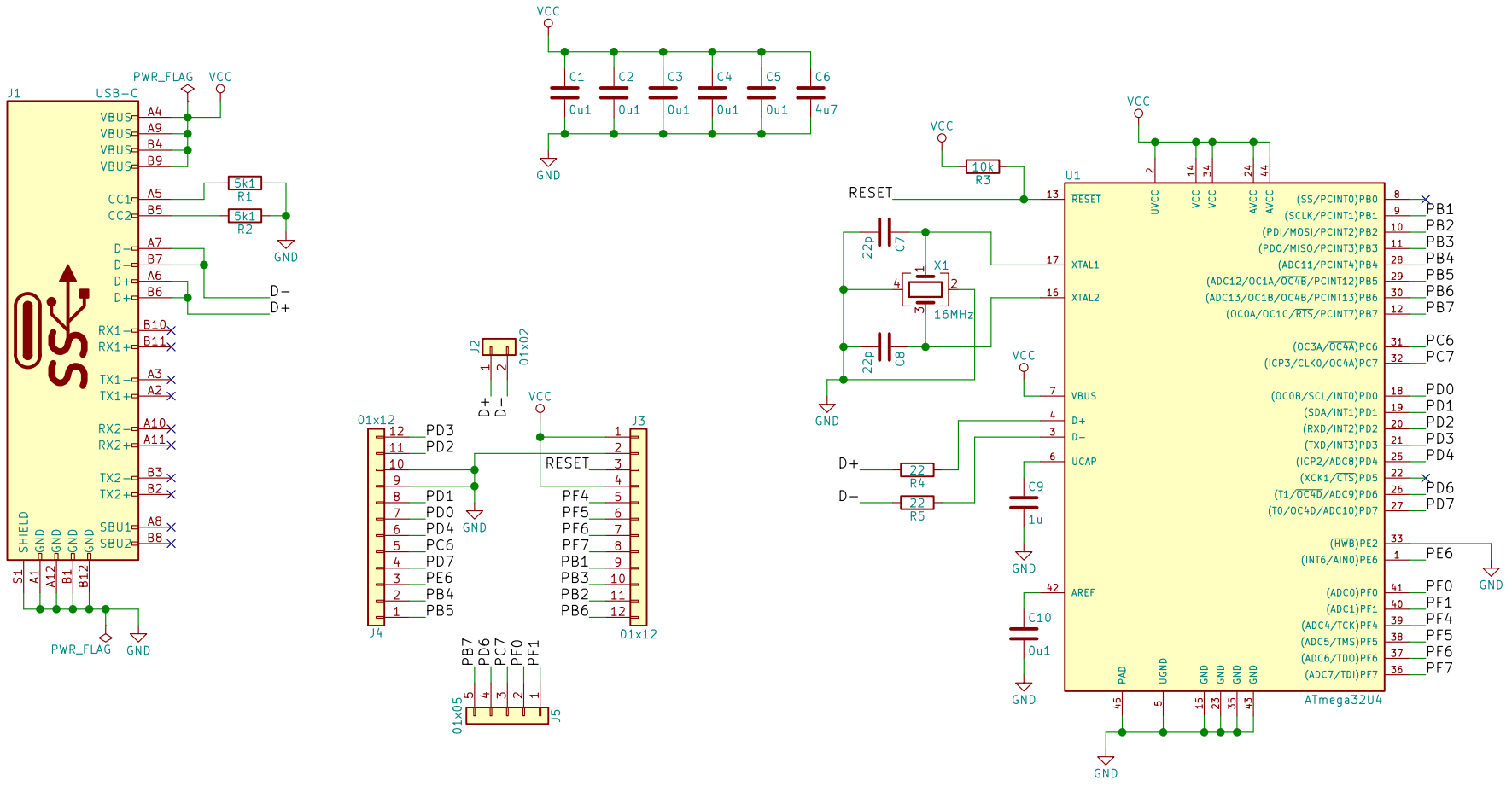

Released under the Creative Commons Attribution Share-Alike 4.0 License
https://creativecommons.org/licenses/by-sa/4.0/

Original Arduino Mini Design by Team Arduino
Arduino Pro Mini Design by Spark Fun Electronics
Pro Micro Design by Spark Fun Electronics
Goldfish Design by Dr Derivative

Sheet: /
File: goldfish.sch

Title: Goldfish

Size: A4	Date: 2017-12-20	**Rev: A**
KiCad E.D.A. kicad 4.0.7		Id: 1/1