REVISIONS				
ZONE	REV	DESCRIPTION	DATE	APPROVED

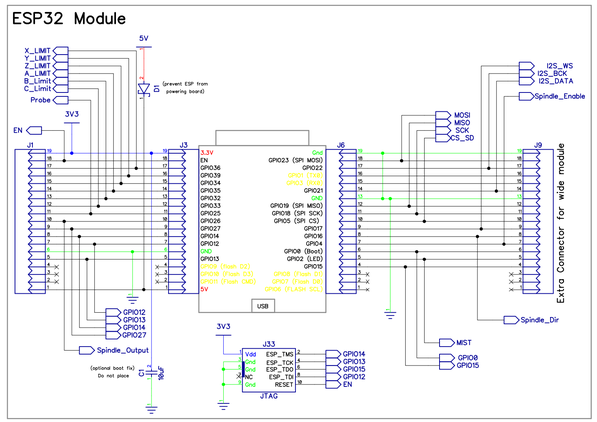

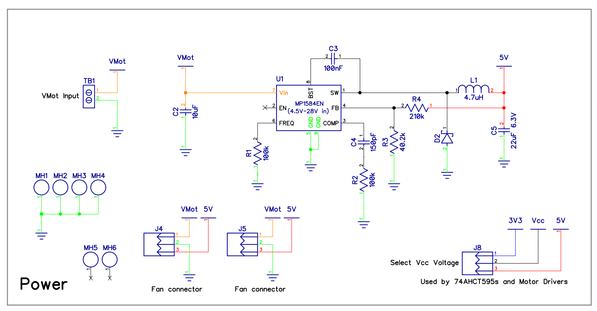

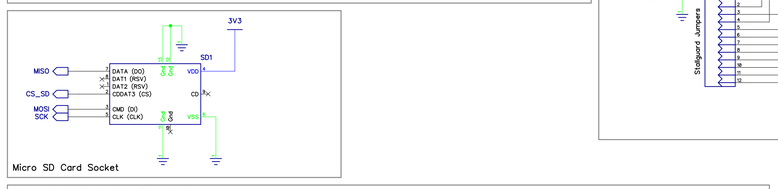

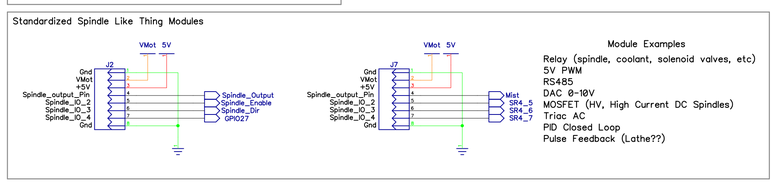

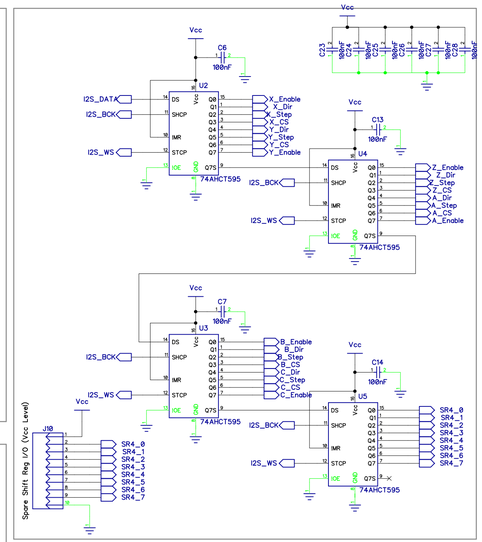

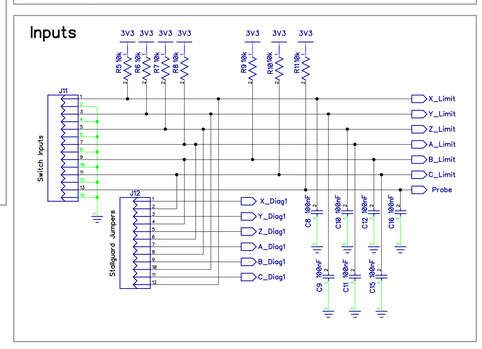

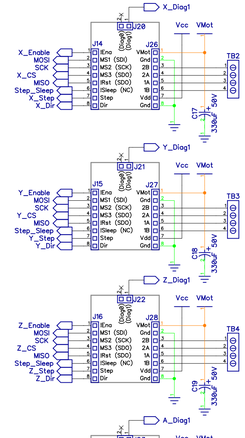

RefDes	Value	Name	Quantity	Manufacturer
C1, C2	10uF	CAP_NP_1206	2	
C3, C6, C7, C8, C9, C10, C11, C12, C13, C14, C15, C16, C23, C24, C25, C26, C27, C28	100nF	CAP_NP_1206	18	
C4	150pF	CAP_NP_1206	1	
C5	22uF 6.3V	CAP_NP_1206	1	
C17, C18, C19, C20, C21, C22	330uF 50V		6	
D1, D2		10BQ100	2	Vishay SS2P2L-M3/84A
J1, J3, J6		1x19 Female Header 0.1"	3	AliExpress
J2, J7		HDR-1x8	2	
J4, J5, J8, J13		Header, Male 1.3 0.1"	4	
J9		HDR-1x19	1	
J10		HDR-2x5	1	
J11		HDR-2x7	1	
J12		HDR-2x6	1	
J14, J15, J16, J17, J18, J19, J26, J27, J28, J29, J30, J31		Header 1x8 Socket	12	
J20, J21, J22, J23, J24, J25		Header 1x2 Socket	6	
J33	JTAG	DC3-10P	1	
L1	4.7uH	IND_1210	1	
MH1, MH2, MH3, MH4, MH5, MH6		Mounting_hole_M3.7	6	
R1, R2	100k	RES_0805	2	
R3	40.2k	RES_0805	1	
R4	210k	RES_0805	1	
R5, R6, R7, R8, R9, R10, R11	10k	RES_0805	7	
SD1		TF-01A	1	Korean Hroparts Elec TF-01A
TB1		TB_5mm_2POS	1	
TB2, TB3, TB4, TB5, TB6, TB7		TB_3.5mm_4POS_PHOENIX_1845119	6	Phoenix contact
U1	MP1584EN	MP1584EN	1	
U2, U3, U4, U5	74AHCT595	74AHCT595	4	

	ESP32 SPI 6 Axis			
	ESP32 SPI 6 Axis			
Buildlog.net	SIZE	FSCM NO.	DWG NO.	REV 0.4
	SCALE		Sheet 1	