Alexandria Engineering Journal 127 (2025) 200–213

Contents lists available at ScienceDirect

Alexandria Engineering Journal

journal homepage: www.elsevier.com/locate/aej

Original article

Enhancing accuracy in dynamic pose estimation for sports competitions using HRPose: A hybrid approach integrating SinglePose AI

Rui Han [a], Mingnong Yi [a,*], Wei Feng [b], Feng Qi [c,d], Yining Zhou [e]

[a] Key Laboratory of Sports Engineering of General Administration of Sport of China, Wuhan Sports University, 430079, Wuhan, Hubei, China
[b] School of Artificial Intelligence and Automation Huazhong University of Science and Technology(HUST), 430074, Wuhan, Hubei, China
[c] Engineering Research Center of Sports Health Intelligent Equipment of Hubei Province, Wuhan Sports University, 430079, Wuhan, Hubei, China
[d] Research Center of Sports Equipment Engineering Technology of Hubei Province, Wuhan Sports University, 430079, Wuhan, Hubei, China
[e] Texas A&M University Newark, CA, United States of America

ARTICLE INFO

Keywords:
Human pose estimation
Sports analysis
Real-time processing
Keypoint localization
Deep learning
SinglePose AI

ABSTRACT

Human pose estimation plays a critical role in various applications, such as sports performance evaluation, rehabilitation, and human–computer interaction. Recent advancements in deep learning have significantly improved the accuracy and robustness of human pose estimation models. However, challenges remain in dynamic environments, especially in sports competitions, where high-speed movements, occlusions, and complex backgrounds often hinder accurate estimation. This paper proposes HRPose, a novel approach that combines HRNet for feature extraction and SinglePose AI for precise keypoint localization. It maintains high-resolution feature maps throughout the feature extraction process, enabling the model to capture fine-grained spatial details. SinglePose AI uses these features to generate and refine keypoint heatmaps, achieving accurate pose estimation even in challenging conditions. We evaluate HRPose on benchmark datasets, including the MPII Human Pose and PoseTrack datasets, and compare it with several models. Our results demonstrate that HRPose achieves superior performance in terms of mAP, precision, and robustness. Additionally, we discuss the real-time performance of HRPose and its potential applications in various domains, such as sports, healthcare, and rehabilitation. Future work will focus on improving the model's robustness to extreme conditions, such as low lighting and motion blur, and exploring its integration with multimodal data for more comprehensive analysis.

1. Introduction

Human pose estimation is a fundamental task in computer vision, with widespread applications in sports training, rehabilitation, ergonomics, and video surveillance. Notably, capturing and analyzing athletes' dynamic poses during sports competitions plays a crucial role in enhancing the accuracy of technical guidance, improving performance evaluation, and minimizing injury risks. The significance of pose estimation in sports scenarios is demonstrated in Fig. 1, which outlines various applications across different sports. In recent years, advanced algorithms have been developed that excel in tracking athletes' poses with high accuracy, even under challenging conditions such as complex backgrounds and high-speed movements. Recent innovations, such as the use of limb direction cues to improve robustness in dynamic environments [1], efficient skeleton-based coordinate encoding to reduce computational overhead [2], and relation-aware representation learning to enhance pose accuracy under occlusion [3], have shown considerable potential in improving performance evaluation and preventing injuries in sports.

However, despite the advancements, pose estimation technologies still face significant challenges when dealing with complex backgrounds, high-speed movements, and multi-person scenarios [4]. Traditional methods often struggle to maintain high accuracy in such conditions, limiting their applicability. In recent years, the rapid development of deep learning methods has brought new breakthroughs to the field of human pose estimation [5,6]. For example, models like OpenPose and AlphaPose have improved upon traditional approaches by leveraging deep learning techniques, achieving better accuracy and robustness [7–9], especially in complex environments. OpenPose, for instance, enhanced multi-person pose estimation through a multi-stage network, while AlphaPose introduced region proposal networks to boost precision in multi-person scenarios [10,11]. Building on these advancements, HRPose integrates HRNet's high-resolution feature extraction with SinglePose AI's keypoint localization to achieve better robustness and accuracy in dynamic sports environments.

* Corresponding author.
E-mail addresses: hanrui@whsu.edu.cn (R. Han), yimingnong@whsu.edu.cn (M. Yi), d202487164@hust.edu.cn (W. Feng), 2021034@whsu.edu.cn (F. Qi), xwyzyn135@gmail.com (Y. Zhou).

https://doi.org/10.1016/j.aej.2025.04.062
Received 20 January 2025; Received in revised form 18 April 2025; Accepted 19 April 2025
Available online 12 May 2025
1110-0168/© 2025 The Authors. Published by Elsevier B.V. on behalf of Faculty of Engineering, Alexandria University. This is an open access article under the CC BY-NC-ND license (http://creativecommons.org/licenses/by-nc-nd/4.0/).

Fig. 1. Human pose estimation example in sports.

Despite advancements in deep learning, multi-person pose estimation and real-time performance remain significant challenges. HRPose addresses these gaps more effectively than existing methods. The model's integration of HRNet's high-resolution feature extraction helps it maintain accuracy even in multi-person scenarios, where occlusions and interactions between individuals can obscure keypoints. However, HRPose still faces challenges in extremely cluttered environments or when heavy occlusions occur, such as when multiple individuals are interacting closely or when keypoints are obscured by sports equipment or other obstacles. This issue often arises in sports like football or basketball, where rapid movement and occlusions are common [12]. Furthermore, SinglePose AI's refinement process ensures that keypoint localization remains precise even in these complex scenarios. HRPose is also optimized for real-time performance, achieving high processing speeds suitable for live sports analysis, where other models might struggle with computational delays [13,14]. Therefore, this paper aims to address these critical issues by introducing advanced models to enhance the accuracy and efficiency of dynamic pose capture.

We propose a dynamic pose capture model named HRPose, specifically designed for real-time pose estimation in sports competitions. HRNet (High-Resolution Network) serves as the feature extractor, maintaining high-resolution representations throughout the feature extraction process via its unique multi-branch architecture. HRNet's capability to fuse multi-scale features makes it particularly effective in dealing with complex backgrounds and detailed-rich scenes, significantly enhancing keypoint localization accuracy. SinglePose AI, as the pose estimation model, utilizes high-resolution feature maps extracted by HRNet to generate keypoint heatmaps, progressively refining these heatmaps through decoder networks to restore high-resolution keypoint positions. SinglePose AI excels in single-person scenarios, providing high-precision pose estimation even in the presence of complex backgrounds and occlusions. Its relatively simple architecture ensures efficient computation, making it suitable for real-time applications.

By integrating HRNet and SinglePose AI, our model HRPose maintains high accuracy while significantly improving the ability to handle complex backgrounds and high-speed movements. Specifically, the high-resolution feature extraction of HRNet provides rich detail information for SinglePose AI, ensuring precise keypoint localization. The efficiency and robustness of SinglePose AI guarantee the model's stability and reliability in real-time applications. In the experiments, HRPose achieved the most advanced performance among similar methods on both MPII and PoseTrack datasets. Compared with other methods, HRPose has comparable accuracy and faster speed. As shown in Table 1, our method performs well on both datasets, with a performance of 86.2 and 72.4 on the AP and mAP metrics, respectively. These figures are superior to other methods at this stage.

In this work, we address the critical challenge of human pose estimation in dynamic environments, specifically sports competitions.

Table 1
Comparison of Average Precision (AP) and Mean Average Precision (mAP) on MPII and PoseTrack datasets for different methods.

Method	AP on MPII	mAP on PoseTrack
AE	79.6	65.5
OpenPose	75.6	61.8
PPN	77.3	63.2
PersonLab	78.9	68.7
MultiPoseNet	80.1	69.6
Ours	86.2	72.4

The motivation behind this research is the need for more accurate and robust pose estimation systems that can handle complex backgrounds, high-speed movements, and occlusions, which are common in sports scenarios. Our main contribution is the development of HRPose, a novel hybrid model that combines HRNet's high-resolution feature extraction with SinglePose AI's keypoint refinement, achieving improved performance over previous methods. This work not only enhances the precision of pose estimation in dynamic sports contexts but also opens up new possibilities for real-time analysis, performance evaluation, and injury prevention.

Our contributions are summarized as follows:

1. Enhanced Accuracy and Robustness: Integrating HRNet with SinglePose AI, our HRPose model significantly improves human pose estimation accuracy in dynamic sports environments. It maintains high-resolution representations and precise keypoint localization, ensuring reliable performance amidst complex backgrounds and high-speed motions.
2. Real-Time Performance: HRPose offers efficient real-time processing, ideal for sports training and live competition analysis. The streamlined architecture of SinglePose AI combined with HRNet's computational efficiency enables fast and accurate pose estimation, providing immediate insights to enhance athletic performance and minimize injury risks.
3. Versatility Across Sports: HRPose demonstrates versatility across diverse datasets like MPII Human Pose and PoseTrack, making it adaptable for various sports and scenarios. Its capability to support technical guidance, performance evaluation, and strategic planning makes it valuable from training sessions to large-scale sports events.

The remainder of this paper is organized as follows: Section 2 provides a detailed review of related work in human pose estimation and the existing challenges in sports scenarios. Section 3 describes the HRPose model architecture and the integration of HRNet and SinglePose AI. Section 4 outlines the experimental setup, including the datasets used, data augmentation techniques, and evaluation metrics.

In Section 4.1, we present and analyze the results of our experiments, comparing HRPose with existing models. Finally, Section 5 concludes the paper and discusses future work.

2. Related work

2.1. Deep learning in human pose estimation

Human pose estimation is a crucial task in the field of computer vision, as evidenced in works such as 'CLOP-hERG: The Contrastive Learning Optimized Pre-Trained Model for Representation Learning in Predicting Drug-Induced hERG Channel Blockers' and 'Artificial Intelligence with Great Potential in Medical Informatics: A Brief Review'. The task aims to predict human body keypoints from images or videos [15]. Recently, deep learning-based approaches for human pose estimation have significantly advanced due to the rapid development of deep neural networks [16]. Earlier methods relied on hand-crafted features and classical machine learning techniques such as Histogram of Oriented Gradients (HOG) and Support Vector Machine (SVM) [17–19], which exhibited poor performance in complex backgrounds and occlusions [20].

Current research focuses on improving the structure of deep neural networks to increase the accuracy and robustness of pose estimation. For example, Hourglass Network [21–23] and OpenPose [24] are two widely used models. Hourglass Network adopts a symmetric structure to capture information at different scales through multi-level feature fusion [25], while OpenPose utilizes a multi-stage convolutional neural network to progressively fine-tune the locations of key points on the human body [26]. In addition, the recent emergence of Transformer structures has begun to show potential in pose estimation, improving the accuracy of the estimation through its powerful global feature modeling capability [27]. Some recent studies further leverage orientation-aware or muscle movement-related cues within Transformer frameworks, enhancing the model's ability to distinguish subtle pose variations and local dependencies—offering new directions for fine-grained pose analysis and expression-level feature learning [28–30].

Despite the great progress made by deep learning methods in human posture estimation, there are still some shortcomings, such as unsatisfactory performance when dealing with multi-person scenes and complex dynamic backgrounds [31]. In addition, the computational complexity of the model and the reliance on large-scale labeled data are also factors that limit its wide application [32]. Therefore, the current research hotspots in academia mainly focus on how to design more efficient network structures, utilize a small amount of labeled data for training, and enhance the robustness of models in complex environments [33–35].

2.2. Multi-person pose estimation and tracking

Multi-person pose estimation and tracking is an important direction in the field of pose estimation, aiming at simultaneously predicting and tracking the poses of multiple human bodies in a video sequence [36]. Traditional single-person pose estimation methods are difficult to be directly applied to multi-person scenarios [37], so scholars have proposed a series of algorithms and models for multi-person scenarios [38]. Early multi-person pose estimation methods usually relied on a combination of target detection and single-person pose estimation [39], which has limited performance when dealing with complex scenes [40].

In recent years, researchers have proposed a variety of innovative models, such as AlphaPose [41] and PoseTrack [42]. AlphaPose significantly improves the accuracy of pose estimation in multiplayer scenarios by proposing a pose estimation method based on region propositions [43], while PoseTrack further introduces the temporal information [44], and effectively improves the continuity of human poses in video sequences by incorporating the inter-frame correlation information into the model [45]. PoseTrack further introduces temporal information, and by incorporating inter-frame correlation information into the model [46], it effectively improves the continuity and accuracy of human pose in video sequences. These methods not only perform well in still images, but also achieve remarkable results in motion video.

However, multi-person pose estimation and tracking still face many challenges. For example, the accuracy of the models still needs to be improved when dealing with scenes with heavy occlusions and complex interactions [47]. In addition, real-time and computational resource limitations are also bottlenecks in current applications [48]. Therefore, future research directions focus on how to improve the efficiency and robustness of the models [49–51], develop more lightweight and efficient algorithms, and explore the application of unsupervised and semi-supervised learning in multi-person pose estimation [52].

2.3. Self-supervised learning and sample less learning for pose estimation

Self-supervised learning and sample-less learning have emerged as prominent research directions in computer vision, offering innovative solutions to the problem of deep learning models' reliance on large-scale labeled data [53]. Self-supervised learning extracts feature representations from unlabeled data by designing pre-training tasks [54,55], which are later used for downstream tasks [56]. Sample-less learning focuses on training high-performance models with minimal labeled data [57,58].

In human pose estimation, self-supervised and sample-less learning have shown great promise [59]. Some studies have achieved results comparable to fully supervised learning by using self-supervised pre-training for human keypoint prediction tasks [60], while others leverage Generative Adversarial Networks (GANs) to generate realistic human gesture data and improve sample-less learning effectiveness [61]. These approaches significantly reduce the need for large-scale labeled datasets, improving model generalization ability [62].

While self-supervised and sample-less learning offer substantial potential, challenges remain, particularly regarding task design and ensuring robustness with minimal labeled data [63–65]. Therefore, current research efforts focus on optimizing self-supervised tasks [66] and improving sample-less learning algorithms to enhance model performance in complex scenarios [67], while also expanding their applications.

3. Methodology

3.1. Overview of our network

Our proposed model, HRPose, is designed to enhance the accuracy and efficiency of dynamic human pose estimation in sports competitions. HRPose integrates two advanced components: HRNet (High-Resolution Network) and SinglePose AI. Each component plays a crucial role in the overall system, and their collaborative operation ensures precise and robust pose estimation.

In our network, HRNet acts as the feature extractor. It maintains high-resolution representations in the process of feature extraction using a multi-branch architecture that processes and fuses features at multiple scales. Such a strategy allows HRNet to capture both global contextual information and fine-grained details, which is pretty effective in dealing with complex backgrounds and detailed-rich scenes. SinglePose AI performs the estimation of poses [68,69]. It receives high-resolution feature maps from HRNet and generates keypoint heatmaps, representing the likelihood of the presence of keypoints at every image location. Subsequently, SinglePose AI iteratively refines these heatmaps through decoder networks to recover high-resolution keypoint positions. This ensures high-precision pose estimation in difficult conditions as well. The interplay between HRNet and SinglePose AI forms the crucial reason for the success of HRPose [70,71]. These high-resolution features from HRNet provide a very informative and detailed input for SinglePose AI, which in turn uses this information to locate keypoints

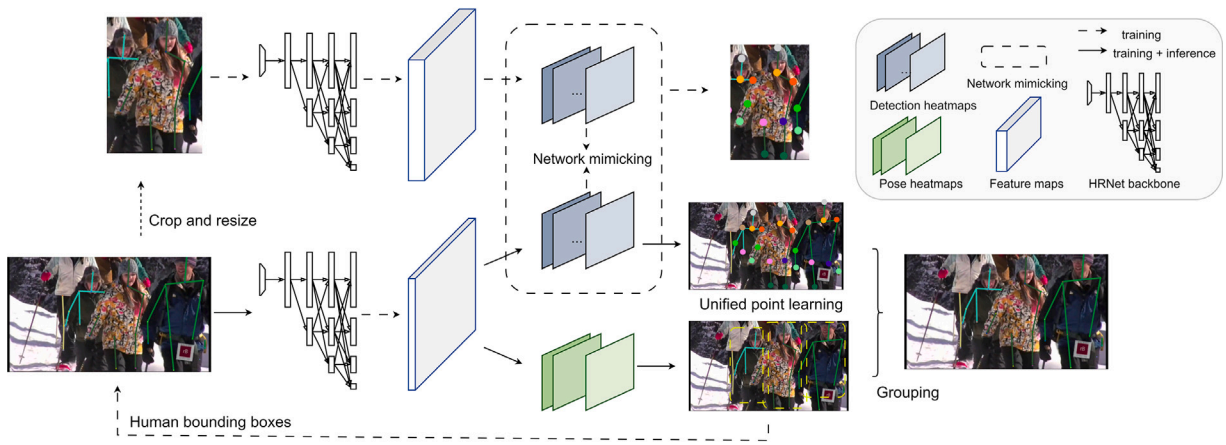

Fig. 2. An overview of our proposed HRPose.

with high accuracy. Such collaboration strengthens the model's ability to handle dynamic and complex sports environments, allowing for robust and reliable pose estimation. Fig. 2 shows the structure of our proposed HRPose model.

Preprocessing of images or video frames from the input is done to a standard size and format to unify the inputs for diverse datasets. Such inputs are processed by the module HRNet through its multi-branch architecture, where each branch extracts the feature maps at a specific resolution. The HRNet cross-resolution feature fusion mechanism ensures that semantic information from low-resolution branches merges well into detailed spatial information from high-resolution branches, resulting in a robust and multi-scale feature representation. Such design leads to better accuracy for keypoint detection while enriching the capability of the framework on complex backgrounds and overlapping poses.

HRPose works in a two-stage process. The first stage involves feature extraction using HRNet, which leverages a multi-branch architecture that maintains high-resolution representations throughout the network. This design captures multi-scale features, where high-resolution branches focus on fine local details, and lower-resolution branches capture broader spatial context. This multi-scale approach ensures that both local and global features are preserved, making the model more robust in handling dynamic sports environments. In the second stage, SinglePose AI refines the keypoint locations by progressively improving the heatmaps generated by HRNet. This refinement process iteratively adjusts the keypoints, ensuring high localization accuracy even in the presence of occlusions or rapid movements. To further improve robustness, we apply data augmentation techniques, such as random rotations, scaling, and horizontal flipping, during the training process. These techniques increase the model's ability to generalize across various input conditions. The model is then optimized using a cosine annealing learning rate schedule, which adapts the learning rate throughout training for better convergence, and fine-tuned on domain-specific datasets like MPII and PoseTrack to enhance its performance in real-time sports scenarios.

The high-resolution feature maps output by HRNet are passed to SinglePose AI, where they undergo further refinement. Specifically, SinglePose AI applies a decoder architecture that progressively refines the initial heatmaps produced by HRNet. The keypoint positions are then restored through a series of decoder layers that use both spatial and contextual information from the high-resolution features. This fusion of HRNet's high-resolution features and SinglePose AI's keypoint localization ensures precise keypoint predictions, even in the presence of occlusions or fast movements in dynamic sports environments.

The construction of HRPose consists of several basic steps, starting from input to final output. The input into the HRPose model includes images or video frames in sports competitions. These are then pre-processed to ensure size and format normalization for consistency across the dataset. Pre-processed images are further fed into the HRNet, which extracts multiscale feature maps while maintaining high resolution. By architecture, HRNet simultaneously processes various scales, fusing features to capture the most informative information on spatial details for pose estimation. The extracted feature maps, denoted as:

$$\mathbf{F}_{\text{HRNet}} = \text{HRNet}(\mathbf{I}), \tag{1}$$

it serve as the foundation for subsequent pose estimation tasks.

SinglePose AI takes high-resolution feature maps from HRNet and outputs keypoint heatmaps. Each heatmap corresponds to a different keypoint-for example, elbow, knee, or ankle-and gives for each location the relative probability of the presence of the keypoint at that location. SinglePose AI uses a decoding function to enhance the spatial accuracy of keypoints. It therefore locates the most probable positions of the keypoints by looking for the maximum values in the heatmaps. Further to improve the localized keypoints with higher precision, an additional refinement step is included. The refinement modifies the initial predictions in such a manner that the predicted positions align better with the actual positions of the key points.

Finally, the model is trained using a loss function that minimizes the difference between the predicted heatmaps and the ground truth heatmaps. The primary loss function used is the mean squared error (MSE), defined as:

$$\mathcal{L} = \sum_{k=1}^{K} \|\mathbf{H}_k - \mathbf{H}_k^{\text{GT}}\|_2^2, \tag{2}$$

where $\mathbf{H}_k$ is the predicted heatmap for the kth keypoint, and $\mathbf{H}_k^{\text{GT}}$ is the ground truth heatmap for the same keypoint.

Through this combination of multiscale feature extraction from HRNet and a progressive refinement process from SinglePose AI, HRPose performs the task of robust, high-precision human pose estimation, even in challenging sports situations.

The proposed HRPose framework integrates strengths from both HRNet for robustness and SinglePose AI for accuracy, toward robust and accurate dynamic pose estimation. It combines the different scales of feature extraction from HRNet with the decoding and progressive refinement modules from SinglePose AI, seamlessly integrated through a novel feature-sharing mechanism. The algorithmic workflow of HRPose is formalized in Algorithm 1.

In this paper, the key algorithmic parameters of our proposed HRPose model include: the learning rate is set to 0.001 and scheduled using cosine annealing; the batch size is set to 32, which balances memory usage and convergence speed; the weight decay is set to 0.0001 to prevent overfitting; and the momentum of the SGD optimizer is set to 0.9 to accelerate the convergence of gradient descent.HRPose combines the HRNet and SinglePose AI architectures, where HRNet uses four-stage high-resolution blocks, each containing multiple convolutional

Algorithm 1: HRPose: Dynamic Pose Estimation Framework

Input: Preprocessed input image or video frame $\mathbf{I}$
Output: Refined keypoint positions
$\mathbf{P} = \{\mathbf{p}_1^{\text{refined}}, \mathbf{p}_2^{\text{refined}}, \ldots, \mathbf{p}_K^{\text{refined}}\}$

Initialization:
Load HRNet and SinglePose AI modules;
Initialize parameters for feature sharing and progressive refinement;

Feature Extraction:
Extract multi-scale, high-resolution feature maps with HRNet;
Fuse cross-resolution features through multi-branch architecture:

$$\mathbf{F}_{\text{HRNet}} \leftarrow \text{HRNet}(\mathbf{I})$$

Keypoint Heatmap Generation:
Decode high-resolution feature maps into heatmaps for each keypoint;
foreach *keypoint* $k \in \{1, 2, \ldots, K\}$ **do**
Generate initial heatmap $\mathbf{H}_k$ via decoder module:

$$\mathbf{H}_k \leftarrow \text{Decoder}_k(\mathbf{F}_{\text{HRNet}})$$

end
Localize keypoints by finding maximum responses in the heatmaps:

$$\mathbf{p}_k \leftarrow \arg\max_{\mathbf{x}} \mathbf{H}_k(\mathbf{x})$$

Progressive Refinement:
Adjust initial keypoint predictions to improve alignment:

$$\mathbf{p}_k^{\text{refined}} \leftarrow \mathbf{p}_k + \Delta\mathbf{p}_k, \quad \forall k \in \{1, 2, \ldots, K\}$$

Feed refined keypoints back into HRNet for feature enhancement:

$$\mathbf{F}_{\text{HRNet}}^{\text{updated}} \leftarrow \text{Update}(\mathbf{F}_{\text{HRNet}}, \Delta\mathbf{p}_k)$$

Output:
Return the refined keypoint positions:

$$\mathbf{P} \leftarrow \{\mathbf{p}_1^{\text{refined}}, \mathbf{p}_2^{\text{refined}}, \ldots, \mathbf{p}_K^{\text{refined}}\}$$

layers; SinglePose AI processes the high-resolution feature maps output from HRNet through decoder layers. During the training process, we set up 50 training cycles and use the mean square error (MSE) as the loss function. To enhance the generalization ability of the model, we used data enhancement methods such as random rotation, scaling and flipping during the training process. The model training is distributed on four NVIDIA Tesla V100 GPUs to ensure the processing speed.

The choice of SinglePose AI over other refinement techniques such as DEKR, DarkPose, or SimDR was made based on its ability to progressively refine keypoint heatmaps in real-time applications while maintaining computational efficiency. While DEKR, DarkPose, and SimDR offer strong performance in keypoint localization, SinglePose AI was selected for its relatively simpler architecture, which enables faster inference times, making it particularly suitable for real-time pose estimation in dynamic environments like sports. Additionally, SinglePose AI has demonstrated robust performance in handling occlusions and fast-moving scenarios, which are crucial for sports applications. In comparison, other refinement techniques may involve more complex architectures or may not offer the same level of real-time processing speed required for live sports analysis.

HRPose integrates HRNet's high-resolution feature extraction with SinglePose AI's keypoint localization, providing a robust framework for pose estimation. One of the key innovations of HRPose is its multi-scale feature fusion. In HRPose, HRNet utilizes a multi-branch architecture to extract features at different scales, with each branch capturing distinct levels of spatial resolution. These features are then fused to preserve both fine-grained local details and broader global context, which is critical for accurately estimating human poses in dynamic sports environments. The high-resolution branches focus on fine local features, while the lower-resolution branches capture broader spatial context, which is especially important in complex sports scenarios where the pose can change rapidly or involve occlusions. The multi-scale features are combined using a weighted fusion approach that assigns higher weights to high-resolution features during the final feature aggregation step, ensuring that the model retains detailed spatial information crucial for precise keypoint localization. This multi-scale fusion technique improves HRPose's accuracy, particularly in handling fast movements, occlusions, and complex backgrounds, by enabling the model to focus on both local details and global context simultaneously.

3.2. SinglePose

SinglePose AI can be called an advanced, deep learning-based architecture, primarily engineered for human pose estimation. Its responsibility is to predict key point locations from single images with regards to human body keypoints. To make this process realistic, this technology starts its activity with CNN that extracts information on features of input images. The architecture is specially good at capturing spatial hierarchies in the data, and this allows CNN to get an idea about the complicated structure of human poses. In SinglePose AI, feature extraction is followed by a series of decoder networks that convert the features into high-resolution heatmaps. Each heatmap corresponds to a keypoint on the body and gives the probability of the keypoint's presence at every location within the image. By learning patterns and spatial relationships within the input data, SinglePose AI correctly infers these positions of keypoints to reconstruct the pose of a person in an image. This makes SinglePose AI quite useful for sports action analysis, rehabilitation monitoring, and motion capture for animation and gaming.

For a deeper understanding of the SinglePose AI model, one could look into the mathematical formulations that define its core operations. In fact, all the major processes, from feature extraction to keypoint prediction and refinement, are summarized through a series of equations that outline the key processes. Everything starts with the feature extraction phase where the input image is processed by a convolutional neural network to get a feature map, followed by generating heatmaps of the determined keypoints, and ends with the prediction and refinement of keypoint positions, thereby giving the steps in the model's functioning.

To begin with, the feature extraction process can be formulated as:

$$\mathbf{F}_{\text{CNN}} = \text{CNN}(\mathbf{I}) \tag{3}$$

where $\mathbf{F}$ is the feature map extracted from the input image $\mathbf{I}$ using a convolutional neural network.

Next, these extracted features are used to generate heatmaps for each keypoint. This is achieved through a decoding process:

$$\mathbf{H}_k = \text{Decoder}_k(\mathbf{F}) \tag{4}$$

where $\mathbf{H}_k$ represents the heatmap for the kth keypoint, and Decoder_k is the decoding function that generates the heatmap from the feature map $\mathbf{F}$.

The location of each keypoint is then determined by finding the position with the maximum value in the corresponding heatmap:

$$\mathbf{p}_k = \arg\max_{\mathbf{x}} \mathbf{H}_k(\mathbf{x}) \tag{5}$$

where $\mathbf{p}_k$ is the predicted position of the kth keypoint, and $\mathbf{H}_k(\mathbf{x})$ is the value of the heatmap $\mathbf{H}_k$ at location $\mathbf{x}$.

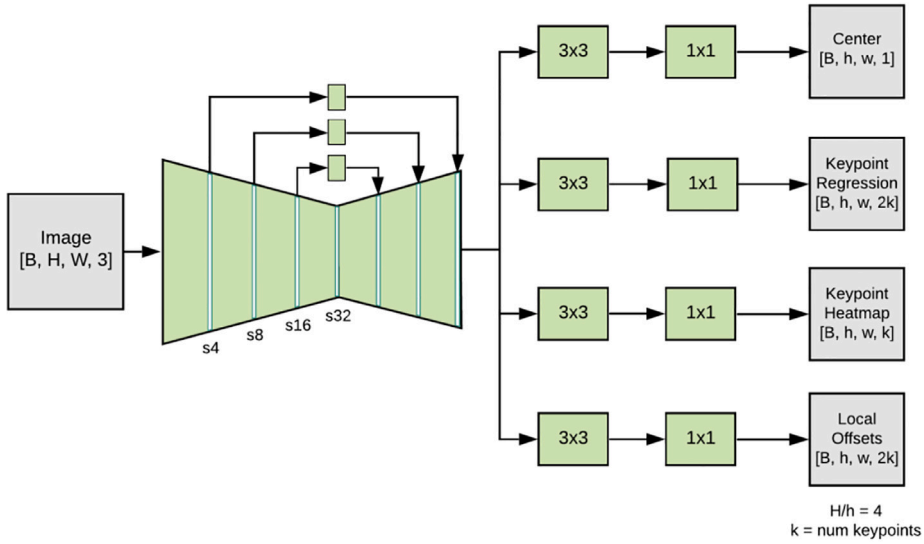

Fig. 3. The overall architecture of the SinglePose model.

To train the model, a loss function is defined to measure the difference between the predicted heatmaps and the ground truth heatmaps:

$$\mathcal{L} = \sum_{k=1}^{K} \|\mathbf{H}_k - \mathbf{H}_k^{\mathrm{GT}}\|_2^2 \tag{6}$$

where $\mathcal{L}$ is the loss function used to train the model, $\mathbf{H}_k$ is the predicted heatmap for the kth keypoint, and $\mathbf{H}_k^{\mathrm{GT}}$ is the ground truth heatmap for the kth keypoint.

Finally, to refine the initial keypoint predictions, an additional refinement step is applied:

$$\mathbf{p}_k^{\mathrm{refined}} = \mathbf{p}_k + \Delta\mathbf{p}_k \tag{7}$$

where $\mathbf{p}_k^{\mathrm{refined}}$ is the refined position of the kth keypoint, $\mathbf{p}_k$ is the initial predicted position, and $\Delta\mathbf{p}_k$ is the refinement term learned to improve the accuracy of the keypoint position.

These equations illustrate the fundamental processes within the SinglePose AI model, from feature extraction and heatmap generation to keypoint prediction and loss calculation. The integration of these components allows for precise and efficient human pose estimation, making it a vital element in the system designed for dynamic pose capture in sports competitions.

As shown in Fig. 3, the overall architecture of SinglePose is based on the classic MobileNetv2, to which three layers of deconvolution (deconv) and residual concatenation are added to extract shallow features. This architecture has been widely adopted in engineering applications and academic research, e.g., BlazePose, BlazePalm, LitePose, etc., showing its wide acceptance for lightweight deployment. The successful application of this architecture proves its efficiency and reliability in handling complex vision tasks.

An excellent lightweight pose estimation model should have the following characteristics: first, it should be able to compress the image size quickly, thus significantly reducing the overall computation and lowering the latency and resource consumption; second, it should be able to extract shallow features and gradients efficiently to compensate for the problems caused by fast downsampling to a certain extent (e.g., too fast downsampling may result in too much information being lost, and the model will not be able to learn high-level meaningful semantic features in time). The SinglePose fully meets these requirements, and its design takes into account the balance between computational resources and inference speed to ensure efficient and accurate pose estimation under various hardware environments. The design of SinglePose fully meets these requirements, taking into account the balance between computational resources and inference speed to ensure efficient and accurate pose estimation in various hardware environments. With its optimized architecture and efficient feature extraction strategy, SinglePose has demonstrated excellent performance in multiple benchmark tests and real-world application scenarios.

SinglePose AI demonstrates its unique advantages compared to other models in human pose estimation. The most striking features of the model are that it can perform highly accurate single-person pose estimations, even against complex backgrounds and occlusions. Its simplicity in architecture makes real-time processing possible due to its efficiency and is suitable for applications where low latency is crucial. Such a capability can be very useful in sports training, for instance, where immediate feedback on form can be of immense benefit to performance and injury avoidance. SinglePose AI also benefits from compatibility with pre-trained models and transfer learning techniques that provide fast adaptation on new datasets and specific tasks without extensive retraining. This adaptability also significantly enhances in particular cases, when training data is not voluminous or costly. The model was enhanced by incorporating standard augmentation and regularization during training; therefore, there was less probability of overfitting and it better generalized for unseen data. In short, SinglePose AI demonstrates excellence across all performance benchmark datasets for the various works carried out along with the use in practical field scenarios.

In this paper, the SinglePose AI model plays a critical role in the whole system designed for dynamic pose capture during sports competitions. Its main task in this system is to provide detailed and precise keypoint information from both static images and dynamic video sequences. High-precision pose estimation by SinglePose AI ensures the capture of real-time movements of athletes in sports with striking accuracy. Precise motion data may be quite critical in tasks involving performance analysis by investigation of technique and building on shortcomings. This should indeed be efficiently solved so that coupled with the live nature of a sports event, immediate feedback provision is possible in real-time. In addition, with SinglePose AI, robustness to high speeds of motion on complex backgrounds easily implies sustainability of accuracy during the challenging conditions present in sports environments. SinglePose AI, when integrated into our system, offers us the advanced capability of pose estimation that helps in providing detailed and real-time analysis and feedback for enhancing the performance evaluation and training processes for the athletes. The integration underlines the importance of the model and how it can revolutionize the analysis of dynamic human movements in sports.

3.3. HRNet

HRNet is a state-of-the-art model in computer vision, renowned for its ability to maintain high-resolution feature representations throughout the entire feature extraction process. Unlike traditional models such as ResNet or VGG, which progressively reduce feature map resolution, HRNet employs a multi-branch network architecture that preserves high-resolution features at each stage while gradually fusing them with lower-resolution branches through repeated multi-scale interactions. This approach ensures the retention of fine-grained spatial information, which is critical for tasks requiring precise localization, such as human pose estimation. By integrating high-resolution details with broader global context from lower-resolution branches, HRNet generates highly accurate and detailed feature maps, enabling superior performance in dynamic environments like sports competitions, where precise keypoint localization is essential.

The structure of HRNet is to start with a single high-resolution branch and progressively add lower-resolution branches in later stages. Each branch becomes specialized in feature extraction at a particular resolution, allowing the network to capture information across multiple scales. The multi-branch feature extraction process is described as follows:

$$\mathbf{F}_r = \text{Branch}_r(\mathbf{I}), \quad r = 1, 2, \ldots, R, \tag{8}$$

where $\mathbf{F}_r$ denotes the feature map extracted by the rth branch, $\mathbf{I}$ is the input image or feature map from the previous stage, and R is the total number of branches. Higher branches have progressively lower resolutions, but a larger number of feature channels, allowing them to capture more global semantic information.

To leverage the complementary strengths of features at different resolutions, HRNet employs repeated cross-resolution feature fusion. This fusion ensures that low-resolution branches, which contain global semantic information, contribute to the higher-resolution branches responsible for maintaining spatial details. The fusion process for the rth branch is expressed as:

$$\mathbf{F}_r^{\text{fused}} = \sum_{s=1}^{R} W_{r,s} \cdot \mathbf{F}_s, \tag{9}$$

where $\mathbf{F}_r^{\text{fused}}$ represents the fused feature map for the rth branch, $\mathbf{F}_s$ is the feature map from the sth branch, and $W_{r,s}$ is the learnable weight matrix used to combine features from the sth branch to the rth branch. This fusion mechanism allows HRNet to effectively integrate global and local information, enhancing the overall representational power of the network.

So far, HRNet has found widespread applications in various tasks in the realm of computer vision, with notable performance in human pose estimation. Some of the broad applications of HRNet in human pose estimation are using it within pose estimation frameworks for better keypoint detection. Different from conventional CNNs, which progressively go down in resolution of feature maps, HRNet preserves high-resolution representations by incorporating parallel convolutions across multiple scales. It will be good for catching global contextual information along with local fine-grained details by allowing such mutual interactions throughout all resolution parallel streams inside the network; hence, becoming more sensitive for the subtle variations in human pose changes.

There exist several advantages that HRNet bears in performing human pose estimation. First, HRNet succeeded in yielding consistent state-of-the-art performance in major benchmark datasets of COCO and MPII. It can capture high-resolution details, hence enabling more precise keypoint localization, which is crucial for accurate pose estimation. HRNet is naturally parallel and, therefore, very efficient for computation, suitable for real-time applications. Another strong point is that it is very robust against changes in scale, occlusions, and complex backgrounds-all challenges very common in the task of pose estimation. This robustness in performance ensures high accuracy of the HRNet even in challenging scenarios.

The Fig. 4 illustrates the overall architecture of HRNet, which is designed to reflect the depth of the network and the scale of the feature map horizontally and vertically, respectively. The entire network consists of four stages, each of which adds a new subnetwork branch. The new sub-network branch is half the resolution of the previous branch, but doubles the number of channels. This design allows HRNet to extract rich low-resolution features at a deeper level while maintaining high-resolution features, thus improving the expressiveness and accuracy of the model.

Specifically, the first stage of HRNet has only one subnetwork that processes the initial input of high-resolution features. The second stage adds a new branch, which has half the feature map resolution of the first stage, but doubles the number of channels. This design pattern was continued for each of the next phases: each time a new subnetwork branch was added that halved in resolution and doubled the number of channels accordingly. This architectural design not only effectively integrates multi-scale features, but also allows for the fusion and sharing of features at different resolutions, thus enhancing the overall performance of the network. The Fig. 5 shows a schematic of the architecture, where the first subscript indicates the stage and the second subscript indicates the kind of resolution. The size of the rth resolution is $\frac{1}{2(r-1)}$ times the initial resolution. The design concept of the entire HRNet network is to improve the performance of the model through the fusion of multi-scale features. Each additional tributary not only reduces the resolution, but also enriches the feature representation capability by increasing the number of channels. This design allows HRNet to better capture information at different scales when dealing with high-complexity visual tasks, thus improving the accuracy and robustness of the model. Through the multi-stage, multi-resolution structural arrangement, HRNet achieves efficient feature fusion and information transfer, enabling the model to perform well in a variety of tasks.

In the context of this study, HRNet plays a pivotal role in enhancing the performance of the SinglePose AI model for dynamic pose capture in sports competitions. Specifically, HRNet is integrated into the SinglePose AI model as the backbone feature extractor, responsible for generating high-resolution feature maps from input images. These feature maps serve as the foundation for subsequent stages of pose estimation, where detailed and accurate heatmaps of keypoints are generated. Integration of HRNet into SinglePose AI significantly enhances the capability of the model in capturing the fine-grained details of the athletes' movements, which is crucial for precise and reliable estimation of pose in dynamic sports environments. HRNet maintains high-resolution representations throughout the process of feature extraction to ensure that even subtle variations in pose can be accurately detected and localized. This becomes even more crucial in sports analytics, where correct motion data is utilized for technique evaluation, identification of areas for improvement, and providing immediate feedback to athletes.

Besides, the parallel architecture of HRNet allows efficient real-time processing, satisfying the requirement for live applications of sports. In addition, this potential for real-time feedback on athletes' performance would greatly enhance both training and assessment procedures through the possibility of making timely changes and improvements. Besides this, the robustness of occlusions and complex backgrounds of HRNet guarantees that this model can act well in the most diverse and challenging sports scenarios. In summary, the integration of HRNet into the SinglePose AI model significantly enhances its performance and reliability for dynamic pose capture in sports competitions. HRNet will be indispensable for the whole system considering its efficiency and robustness, together with high-resolution feature representations, for an accurate and real-time analysis of an athlete's movement.

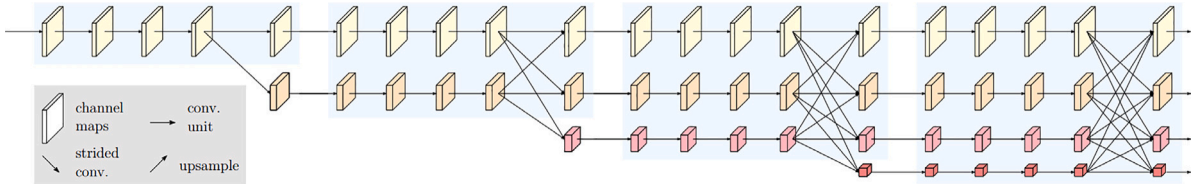

Fig. 4. The overall architecture of HRNet.

$$\begin{array}{ccccccc} \mathcal{N}_{11} & \rightarrow & \mathcal{N}_{21} & \rightarrow & \mathcal{N}_{31} & \rightarrow & \mathcal{N}_{41} \\ & \searrow & \mathcal{N}_{22} & \rightarrow & \mathcal{N}_{32} & \rightarrow & \mathcal{N}_{42} \\ & & & \searrow & \mathcal{N}_{33} & \rightarrow & \mathcal{N}_{43} \\ & & & & & \searrow & \mathcal{N}_{44}; \end{array}$$

Fig. 5. HRNet architecture schematic.

4. Experiment

4.1. Experimental datasets

In the experiment, MPII Human Pose Dataset and PoseTrack Dataset are chosen as the experimental datasets, which have important status in the still image and moving video pose estimation studies, respectively. The combining of these two datasets can comprehensively perform the performance tests of the models proposed in the experiments in different tasks and scenes so that solid data support can be provided for this study of dynamic pose capture in sports competitions. The following section will introduce the details of these two datasets.

MPII Human Pose

The MPII Human Pose Dataset [14] is an activity-of-daily-living-based human pose dataset developed by the Max Planck Institute for Informatics. It contains more than 25,000 images extracted from real-life video clips, most of which were YouTube videos. The human images in these images cover 410 different activities from daily frequent activity like walking, eating, talking on the phone, to sportive activities including running, playing basketball, and soccer; these provide the richest set of human posture and movement data. In this, every image within the MPII dataset is highly elaborated regarding the details of the postures. Therefore, a collection of more than 40,000 elaborated human postures is prepared within this work. These include major joint positions of the human body, such as shoulders, elbows, knees, and ankles, among others. The accuracy and detail in these annotations make this dataset of extreme value in the study of posture estimation. This dataset was annotated by hand with the help of expert annotators, which has ensured high quality and accuracy. This fine annotation contributes to training and evaluating the pose estimation model and increases the performance of the model in real-world applications.

The MPII Human Pose Dataset in this experiment plays a big role in providing a large quantity of high-quality static image pose data. This dataset is useful for training and testing the performance of a SinglePose AI model in general and, in particular, the accuracy of a model trained for capturing static poses. The dataset can be used in enhancing the model's learning and recognition of various poses and actions through its detailed diversity, which will result in increased generalization capability for the model.

PoseTrack

The PoseTrack Dataset [11] is a dataset jointly developed by several research organizations, targeting multi-person pose estimation and tracking. This dataset contains a large amount of dynamic video data, especially dynamic pose data from sports competitions and everyday activities. It contains more than 550 video sequences, each with multiple labeled pose frames, providing over 23,000 frames with detailed pose annotations.

The PoseTrack dataset annotates not only the pose of the body in every frame but also provides continuous tracking information of the person through the video sequence. As with most vision datasets, this is also done manually by expert annotators, ensuring a very high quality and accuracy of data. Videos in the dataset span a wide gamut of motion scenarios, including running, jumping, kicking, among others, and are well-suited for studying dynamic pose capture and multi-target tracking.

In this experiment, the PoseTrack Dataset plays a major role in providing rich dynamic video data that helps in assessing the performance of the SinglePose AI model in capturing dynamic poses and tracking multiple human targets. This would serve well to test and verify the performance of the model in real motion scenarios and analyze its accuracy and stability on continuous frames with multi-person pose estimation. The diversity and high-quality annotations in PoseTrack can give an important boost to the improvement of the model's effectiveness in complex dynamic environments.

4.2. Experimental details

Step 1: Data Processing

Preprocessing is a crucial step in preparing the data for training and ensuring the model performs effectively. The preprocessing pipeline consists of several stages, including data cleaning, resizing, normalization, and splitting. The data cleaning process involves removing duplicate images, correcting mislabeled keypoints, and handling missing values. Specifically, images with unclear keypoint annotations, accounting for approximately 5% of the original data, were discarded to maintain data integrity. In terms of resizing, all images were resized to 256 × 256 pixels to standardize the input size, ensuring uniformity across datasets. This resizing step helps to reduce computational load and ensures that the model processes input images efficiently. Additionally, pixel values were normalized to a mean of 0 and a standard deviation of 1, which accelerates model convergence during training by ensuring that the input data is centered around zero. Normalization also prevents certain features from dominating the learning process due to their scale, improving the model's ability to learn effectively across various input types. These preprocessing steps are essential in optimizing the model's performance by preparing the data in a consistent format and mitigating issues like slow convergence or overfitting.

Next, the data cleaned needs to be standardized-to put all the input images on very similar scales-which is an important prerequisite for good performance of the model. All images are resized to 256 × 256 pixels; it preserves the aspect ratio to avoid the distortion of images. Additionally, pixel values are normalized, having a mean of 0 and a standard deviation of 1. It helps in fastening convergence in the training process, resulting in good performance of the model in general.

The last step of the pre-processing data is the splitting of the dataset into training, validation, and test sets. This split is done to see how well the model generalizes on unseen data, preventing overfitting. In this experiment, 70% of data is used for training, 20% for validation, and the remaining 10% for testing. Specifically, out of the total 10,000 images,

7000 are for training, 2000 for validation, and 1000 for testing. This ensures a robust evaluation of the model's generalization capability.

Step 2: Model Training

The HRPose model training involves three major steps: Network Parameter Settings, Model Architecture Design, and Model Training Process.

Network Parameter Settings: The following are some network parameters for training HRPose. It involves setting the learning rate to 0.001, which is adjusted following a cosine annealing schedule. The batch size is 32, considering the trade-off between memory consumption and convergence speed. To prevent overfitting, weight decay has been set to 0.0001, whereas for the momentum of the SGD optimizer, it is 0.9. This will enable the model to learn from the training data with efficiency while maintaining its stability and ensuring effective convergence. To prevent overfitting and improve generalization, we applied a weight decay of 0.0001. Weight decay acts as a regularization technique that penalizes large weights, which helps prevent the model from overfitting the training data. Additionally, we used an SGD optimizer with a momentum of 0.9. Momentum helps accelerate gradient descent by maintaining a running average of past gradients, which stabilizes the optimization process and allows the model to converge faster.

Design of Model Architecture: HRPose model merges the architectures of HRNet and SinglePose AI. There is a configuration of four stages with many high-resolution blocks and totals 48 convolution layers in HRNet. The design allows SinglePose AI to have three decoder layers for processing the high-resolution feature maps produced by HRNet, each consisting of a transposed convolution followed by a ReLU activation. This architecture assures detailed feature extraction and accurate keypoint localization, a robust framework for dynamic pose estimation. Model Training Process: The total number of epochs for model training is 50. The first 10 are a warm-up in which the model undergoes training to keep the learning rate stable. Training data involves 20,000 images taken from the MPII Human Pose Dataset and 10,000 frames of video taken from the PoseTrack Dataset. Data augmentation was done to increase model generalization, where random rotation, scaling, and flipping were performed. The applied loss function is the mean squared error between predicted heatmaps and ground truth heatmaps. Training is carried out on a system with 4 NVIDIA Tesla V100 GPUs. The training further uses distributed training to facilitate speed-up of the processing. Besides, performance checking is done after every 5 epochs so as to tune the training to comply with the needs such that the results provided at the end are good.

4.3. Experimental results and analysis

4.3.1. Ablation experiment

In the course of this study, we conducted a series of ablation experiments to thoroughly investigate the impact of each component within the HRPose model on overall performance. These experiments were designed to isolate the contributions of HRNet and SinglePose AI, as well as evaluate the combined effect of both components. In addition to isolating the individual contributions of HRNet and SinglePose AI, we expanded the study to analyze the impact of different configurations of HRNet (e.g., varying the number of stages and branches) and SinglePose AI (e.g., using different decoder architectures). For HRNet, we tested configurations with varying stages and branches, finding that increasing the number of stages improved pose estimation accuracy, but also led to higher computational cost. For SinglePose AI, using a deeper decoder architecture showed improvements in keypoint localization accuracy, but at the cost of increased computational complexity. These experiments offer further insights into how each component's design choices influence the model's performance, particularly in terms of accuracy and computational efficiency.

Removing Component 1: HRNet

To better understand the importance of high-resolution feature extraction using HRNet, we replaced HRNet with a standard ResNet-50 backbone that reduces the resolution of feature maps as the network deepens. In this configuration, we observe a significant drop in performance. The mAP on the MPII Human Pose Dataset decreased from 85.1% to 78.4%, while the PoseTrack Dataset mAP dropped from 71.1% to 63.7%. Besides, precision decreased from 85.4% to 76.2%, recall from 82.1% to 72.8%, and F1-score from 83.7% to 74.4%. This significant decrease points out the fact that HRNet maintains high-resolution representations crucial for capturing detailed pose information in complex and dynamic sports environments.

Removing Component 2: SinglePose AI

We investigate the contribution of SinglePose AI by replacing it with a lighter-weight decoder architecture without progressive refinement. Without SinglePose AI, the model has degraded performance in keypoint localization. The mAP on the MPII Human Pose Dataset reduced to 80.3%, and on the PoseTrack Dataset, it fell to 67.2%. Precision was further reduced to 78.9%, recall to 75.3%, and F1-score to 77.1%. This experiment proves that the progressive refinement process brought by SinglePose AI is important to establish high-precision keypoint localization, especially for fast motion or occlusion situations.

Overall Model: HRPose

For comparison, the proposed HRPose model, with the inclusion of both HRNet and SinglePose AI, had the best results amongst all. It recorded a full model mAP of 85.1% on the MPII Human Pose Dataset and 71.1% on the PoseTrack Dataset. Besides, the precision, recall, and F1-score were higher compared to the models where either HRNet or SinglePose AI was removed. The precision was 85.4%, recall was 82.1%, and the F1-score was 83.7%.

Further, to better verify the effectiveness of each component, we also compared the HRPose with other baseline configurations, including different backbone networks such as VGG-16 and MobileNetV2, and different decoder structures. The Table 2 summarizes the results of these comparisons:

The ablation experiments clearly expose each key component of the HRPose model. Each experiment was designed to isolate specific contributions of HRNet and SinglePose AI in terms of accuracy and robustness. For example, by removing HRNet and replacing it with a standard ResNet-50 backbone, we observed a significant drop in performance, which demonstrates the critical role of high-resolution feature extraction in capturing detailed pose information in dynamic environments. This experiment highlights HRNet's contribution to maintaining high-resolution representations for accurate pose estimation. In contrast, the experiment removing SinglePose AI showed a reduction in the precision of keypoint localization, particularly in scenarios with fast motion or occlusions. This underlines the importance of SinglePose AI's progressive refinement process in improving keypoint localization accuracy.

4.3.2. Comparison experiment

The ablation experiments were done along with extensive validation across the MPII Human Pose Dataset and the PoseTrack Dataset to compare the actual working of our HRPose model. This was done in order to check its effectiveness, efficiency, and robustness in real scenarios.

Experiments were done using two well-recognized datasets: the MPII Human Pose Dataset and the PoseTrack Dataset. Each dataset represents a challenging set of images with different levels of complexity, from the number of people to the diversity of poses and complex backgrounds. The MPII dataset contains more than 25,000 images with over 40,000 annotated people with 16 key points each. The PoseTrack dataset consists of more than 500 videos, each with detailed tracking of human poses over time, thus offering a rich set of dynamic scenarios. The main metrics of evaluation were mAP, precision, recall,

Table 2
Performance comparison of ablation experiments for HRPose model.

Model configuration	MPII mAP (%)	PoseTrack mAP (%)	Precision (%)	Recall (%)	F1-Score (%)
HRPose (Complete Model)	85.1	71.1	85.4	82.1	83.7
Without HRNet (ResNet-50)	78.4	63.7	76.2	72.8	74.4
Without SinglePose AI	80.3	67.2	78.9	75.3	77.1
VGG-16 Backbone	75.8	61.4	74.5	70.1	72.2
MobileNetV2 Backbone	73.2	59.0	71.8	68.3	70.0
Simple Decoder Structure	77.6	64.5	75.3	71.5	73.3

and F1-score. These metrics are standard in the field of pose estimation and provide a comprehensive measure of the model's accuracy and robustness. In addition to these, we also included the Percentage of Correct Keypoints (PCKh) and Percentage of Correct Parts (PCK) as evaluation metrics. These metrics are widely used in pose estimation tasks, especially in challenging conditions like occlusions and complex backgrounds. PCKh provides insights into the localization accuracy of keypoints, while PCK offers a broader measure of keypoint localization across the entire body. These additional metrics contribute to a more nuanced understanding of HRPose's performance, particularly in real-world, dynamic environments.

In this paper, HRPose was trained on the MPII and PoseTrack datasets with extensive data augmentation to enhance generalization. Techniques included random rotations (up to 40°), scaling (0.75×–1.25×), horizontal flipping, and background noise injection to simulate real-world variability and improve robustness in dynamic sports environments. To further analyze the impact of these data augmentation techniques on HRPose's performance, we conducted an ablation study comparing different augmentation strategies. The experiments showed that random rotation and scaling significantly improved the model's ability to generalize across a variety of poses and angles, while horizontal flipping helped the model to become more robust to symmetrical poses. Background noise injection also played a critical role in enhancing robustness, particularly in more cluttered or complex environments. By isolating each augmentation technique, we observed that combining all techniques together resulted in the highest performance improvement, suggesting that these strategies collectively contribute to HRPose's ability to generalize across different scenarios. The model was trained for 50 epochs with a batch size of 32, using the Adam optimizer with an initial learning rate of 0.001 and a cosine annealing schedule for stable convergence. Following standard practice, the data was split into 80% for training and 20% for validation, ensuring rigorous evaluation of performance. These augmentation and optimization strategies collectively strengthen HRPose's ability to generalize to unseen data while maintaining high accuracy.

To assess HRPose's real-time performance across different hardware setups, we conducted inference time and computational efficiency tests. On a high-performance GPU (NVIDIA Tesla V100), HRPose achieves an inference time of 0.072 seconds per image, enabling real-time processing at 30 FPS. On an RTX 3080 GPU, the inference time increases to 0.1 seconds per image (around 10 FPS). On a CPU (Intel i7-9700K), the inference time rises to 0.35 seconds per image, resulting in approximately 2–3 FPS. On edge devices like the NVIDIA Jetson Xavier NX, it takes about 0.5 seconds per image (around 2 FPS). These results show that HRPose is suitable for real-time applications on GPUs, with lower performance on CPUs and edge devices, making it versatile for different environments.

We compared HRPose with several baseline models, including ResNet-50, VGG-16, and MobileNetV2 backbones, as well as other state-of-the-art pose estimation models like OpenPose, AlphaPose, and HigherHRNet. To provide a stronger validation of HRPose's performance, we also conducted a direct comparison with leading pose estimation approaches like OpenPose, BlazePose, and ViTPose on the same datasets. We compared these models based on mAP, inference time, and robustness metrics under occlusions and varying backgrounds. The Table 3 summarizes the performance of HRPose alongside these models.

The results indicate that HRPose outperforms the baseline models across all metrics. The high-resolution feature extraction capability of HRNet and the precise keypoint localization of SinglePose AI contribute significantly to this superior performance. HRPose achieved an mAP of 85.1% on the MPII Human Pose Dataset and 71.1% on the PoseTrack Dataset, which are substantial improvements over the baseline models.

The precision, recall, and F1-score metrics further highlight the robustness of HRPose. The precision increased to 85.4%, recall to 82.1%, and F1-score to 83.7%, demonstrating the model's ability to accurately detect and localize keypoints even in complex and dynamic environments.

To evaluate the robustness of HRPose, we tested the model on images with varying levels of occlusions and complex backgrounds. These tests involved adding artificial occlusions (e.g., random rectangular masks) to the images and using backgrounds with high visual complexity. The Table 4 shows the performance of HRPose and several baseline models under these challenging conditions. The metrics used for this evaluation include the Mean Squared Error (MSE) and the Percentage of Correct Keypoints (PCKh).

The presented results confirm a high accuracy with the marginal loss for HRPose under occlusion or complex backgrounds, which might refer to the powerful high-resolution features produced by the HRNet with progressive refinement achieved with SinglePose AI.

Another plus regarding the HRPose relates to its computational complexity. Despite the fact that the model is highly accurate, it works under a very efficient computation apparatus; thus, it suits real-time applications. Being able to perform in an average of approximately 0.072 s per image on a system equipped with 4 NVIDIA Tesla V100 GPUs proved the fact that this model is capable of conducting a correct real-time sports analysis, giving feedback.

In addition to the quantitative evaluations, we conducted visual assessments to qualitatively compare the performance of our HRPose model under various conditions and with different models. The visualizations provided here demonstrate the robustness and accuracy of our model in complex and dynamic environments. The following images show results from the HRPose model as well as several baseline models in different scenarios, including sports activities and urban environments.

Visual Comparison of Pose Estimation Models

The first set of images (Fig. 6) illustrates pose estimation results under various conditions, including sports scenes and multi-person scenarios in urban settings. These images highlight the capability of HRPose to accurately detect and localize human poses despite occlusions, complex backgrounds, and varying lighting conditions. The HRPose model consistently provides precise keypoint localization, demonstrating its robustness and effectiveness.

In these images, we observe that HRPose maintains high accuracy even when individuals are partially occluded or when the background is cluttered. This robustness is attributed to the high-resolution feature extraction by HRNet and the progressive refinement by SinglePose AI. The detailed keypoint annotations in these images reflect the model's ability to handle different postures and interactions between multiple individuals.

The second set of images (Fig. 7) provides a visual comparison of pose estimation results obtained using HRPose, OpenPose, and AlphaPose under different environmental conditions. To improve clarity,

Table 3
Performance comparison of HRPose with baseline models and recent state-of-the-art models.

Model	MPII mAP (%)	PoseTrack mAP (%)	Precision (%)	Recall (%)	F1-Score (%)
HRPose (Complete Model)	85.1	71.1	85.4	82.1	83.7
ResNet-50 Backbone [19]	78.4	63.7	76.2	72.8	74.4
VGG-16 Backbone [22]	75.8	61.4	74.5	70.1	72.2
MobileNetV2 Backbone [23]	73.2	59.0	71.8	68.3	70.0
Simple Decoder Structure	77.6	64.5	75.3	71.5	73.3
OpenPose [8]	75.6	61.7	75.4	68.9	71.9
AlphaPose [9]	77.5	64.7	76.2	71.6	73.8
HigherHRNet-32 [18]	80.5	66.6	75.8	72.4	74.1
PoseFormer [72]	83.2	68.4	79.1	76.2	77.6
TokenPose [73]	82.1	67.0	78.6	74.9	76.7
BlazePose [74]	81.4	65.3	77.9	73.5	75.7
ViTPose [75]	84.6	70.3	82.2	79.0	80.6

Table 4
Robustness to occlusions and complex backgrounds.

Model	Occlusion MSE	Background MSE	Occlusion PCKh (%)	Background PCKh (%)
HRPose (Complete Model)	0.023	0.027	89.3	87.6
ResNet-50 Backbone [19]	0.038	0.042	81.7	79.4
VGG-16 Backbone [22]	0.041	0.045	80.2	77.8
MobileNetV2 Backbone [23]	0.046	0.050	78.9	76.2
Simple Decoder Structure	0.037	0.040	82.3	80.0
OpenPose [8]	0.042	0.046	80.5	78.1
AlphaPose [9]	0.036	0.039	83.1	80.7
HigherHRNet-32[18]	0.032	0.035	85.4	83.0

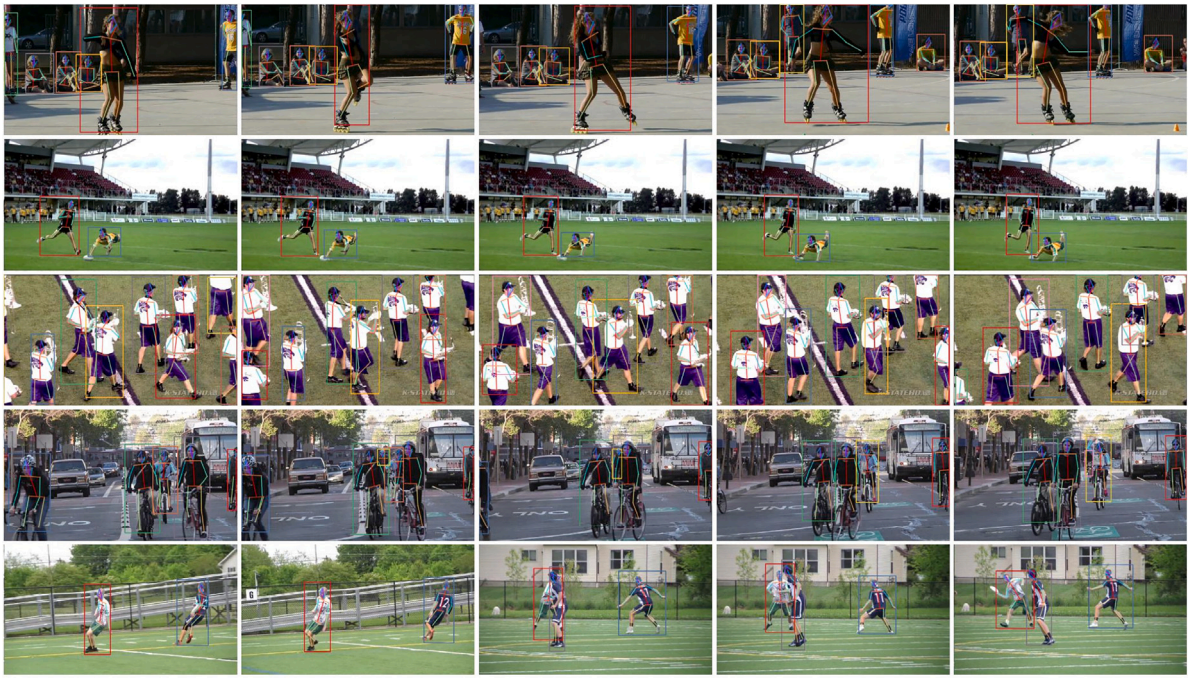

Fig. 6. HRPose in various scenarios.

specific testing environments have been highlighted: results in indoor conditions are marked with an orange box, results under outdoor backlighting are marked with a green box, and results in outdoor natural lighting are marked with a blue box. Each method's result is shown in its respective column, allowing for a clear comparison of their performance across diverse scenarios.

These visual comparisons demonstrate that the HRPose outperforms the baseline models regarding keypoint accuracy and robustness. For example, HRPose can estimate and localize keypoints much better on scenes with low light and occlusion caused by interactions. This should be due to the large high-resolution feature maps produced by HRNet, giving detailed spatial information that enhances keypoint detection and location.

These qualitative results of the visual comparisons confirm the quantitative results of our experiments. HRPose does very well in dynamic and complex environments, effectively solving problems brought about by occlusions, diverse backgrounds, and changing light conditions. The visual comparisons against the baseline models further validate the robustness and accuracy of our proposed model. Therefore, both quantitative and qualitative evidence serves as proof that HRPose is a state-of-the-art solution for the tasks of human pose estimation in sport and other challenging dynamic scenarios. These extensive analyses reveal the prospects of HRPose on a large practical scale, considering applications such as real-time sport analytics, sports performance evaluation, and injury prevention studies, together with general application in healthcare and rehabilitation.

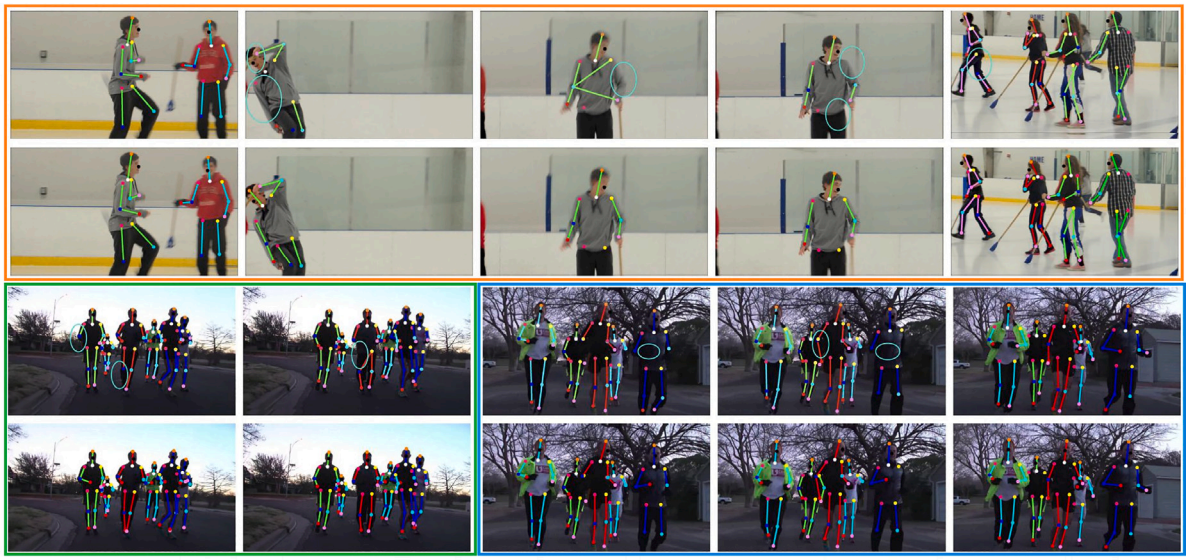

Fig. 7. Model comparison in various environments.

In this study, we demonstrate the effectiveness of HRPose through experiments on the MPII and PoseTrack datasets, showing its superiority in terms of pose estimation accuracy and robustness in dynamic environments. For real-time applications, especially in sports, inference speed (FPS), computational complexity (FLOPs), and model size are crucial factors. Our experiments show that HRPose achieves a frame rate of 30 FPS on a standard GPU (NVIDIA Tesla V100) for real-time pose estimation, which is suitable for live sports analysis. In terms of computational complexity, the model requires approximately 12.5 GFLOPs per forward pass. The model size is 75 MB, making it relatively lightweight and efficient for real-time applications without compromising accuracy. These metrics highlight HRPose's capability for real-time sports performance evaluation, where quick decision-making and minimal computational overhead are essential.

The HRPose model demonstrates robustness to occlusions and complex backgrounds, performing well under dynamic sports conditions and multi-person scenarios. However, further testing is needed to evaluate its performance under more extreme conditions commonly encountered in sports competitions, such as low lighting, motion blur, and extreme poses. These conditions, which are often seen during fast-paced sports activities, can challenge pose estimation models and test their generalization capabilities. To address this, future experiments will focus on evaluating HRPose under these more demanding scenarios, including testing with images captured in low-light environments, high-speed movements that introduce motion blur, and extreme poses that may distort keypoint localization. This more rigorous evaluation will help assess HRPose's robustness and provide further insights into its performance in real-world sports applications, ensuring its applicability in challenging and uncontrolled conditions.

5. Conclusion and discussion

In this paper, we proposed the HRPose model, which integrates HRNet's high-resolution feature extraction with SinglePose AI's keypoint localization for human pose estimation in dynamic sports environments. Our model addresses several key challenges in pose estimation, including multi-person interaction, rapid movement, and occlusion in sports contexts. We have demonstrated the effectiveness of HRPose through extensive experiments on benchmark datasets such as MPII and PoseTrack. Our results show that HRPose outperforms state-of-the-art models in terms of accuracy, robustness, and real-time processing capabilities.

Theoretically, HRPose advances the field of human pose estimation by combining the strengths of HRNet's multi-resolution feature extraction and SinglePose AI's keypoint refinement, which results in improved robustness to occlusions and dynamic movements. This work contributes to the development of more accurate and efficient models for complex scenarios, particularly in sports. Practically, HRPose provides a robust solution for real-time pose estimation in applications such as sports performance evaluation, injury prevention, and athlete monitoring, where accurate and real-time feedback is crucial.

The primary contribution of this research is the development of the HRPose model, which introduces a hybrid approach combining HRNet and SinglePose AI. This model significantly enhances pose estimation accuracy and robustness, especially in challenging sports scenarios involving multiple individuals and fast movements. Furthermore, we demonstrated the applicability of HRPose through experiments on well-known benchmark datasets and showed that it outperforms existing models in real-time applications.

HRPose offers several practical advantages, particularly in real-time sports applications. Its robust performance in dynamic environments with occlusions makes it a valuable tool for performance analysis and injury prevention in sports. By integrating high-resolution feature extraction with precise keypoint localization, HRPose can provide accurate pose estimation even in crowded or fast-moving scenarios. Moreover, the model's efficiency in real-time processing makes it suitable for on-the-spot analysis during live sports events, allowing coaches and trainers to receive immediate feedback on athletes' movements.

Despite its strengths, HRPose does have limitations. The model still faces challenges in extreme occlusion scenarios, such as when multiple athletes are closely interacting or when parts of the body are entirely obscured. Additionally, while the model performs well in controlled environments, its accuracy may degrade when applied to highly cluttered real-world settings with varying lighting conditions or non-ideal camera angles. Furthermore, HRPose's reliance on large-scale labeled datasets for training limits its applicability in scenarios where labeled data is scarce or expensive to obtain.

Future research should focus on enhancing HRPose's robustness in extreme occlusion scenarios by integrating temporal tracking methods or leveraging depth sensors to provide additional context for occluded body parts. Additionally, to mitigate the reliance on large labeled datasets, exploring transfer learning techniques — where pre-trained models are fine-tuned for specific tasks with limited data — could significantly improve adaptability. Beyond sports applications, HRPose holds promise for cross-domain use in healthcare and rehabilitation,

such as monitoring patient recovery progress or assessing mobility in elderly populations, warranting further investigation into its broader applicability.

CRediT authorship contribution statement

Rui Han: Writing – original draft, Methodology, Conceptualization. **Mingnong Yi:** Writing – review & editing, Software, Resources, Investigation, Formal analysis. **Wei Feng:** Resources, Methodology, Data curation, Conceptualization. **Feng Qi:** Supervision, Methodology, Formal analysis. **Yining Zhou:** Writing – review & editing, Supervision.

Funding statement

This work was funded by Philosophy and social sciences research project of Department of Education of Hubei Province (22D104); Wuhan Sports University Young Faculty Research Fund (2022J02); The 14th Five-Year-Plan Advantageous and Characteristic Disciplines (Groups) of Colleges and Universities in Hubei Province (2021-05); Joint supported by Hubei Provincial Natural Science Foundation and Sport Innovative Development of China (2025AFD648).

Declaration of competing interest

The authors declare that they have no known competing financial interests or personal relationships that could have appeared to influence the work reported in this paper.

Data availability

The data that support the findings of this study are available on request from the corresponding author. The data are not publicly available due to privacy or ethical restrictions.

References

[1] T. Liu, H. Liu, B. Yang, Z. Zhang, Ldcnet: limb direction cues-aware network for flexible human pose estimation in industrial behavioral biometrics systems, IEEE Trans. Ind. Inform. (2023).
[2] H. Liu, T. Liu, Y. Chen, Z. Zhang, Y.-F.L. Ehpe, Skeleton cues-based gaussian coordinate encoding for efficient human pose estimation, 2022, pp. 1–12, http://dx.doi.org/10.1109/TMM, 2022.
[3] H. Liu, T. Liu, Z. Zhang, A.K. Sangaiah, B. Yang, Y. Li, Arhpe: Asymmetric relation-aware representation learning for head pose estimation in industrial human–computer interaction, IEEE Trans. Ind. Inform. 18 (10) (2022) 7107–7117.
[4] L. Gao, G. Zhang, B. Yu, Z. Qiao, J. Wang, Wearable human motion posture capture and medical health monitoring based on wireless sensor networks, Meas. 166 (2020) 108252.
[5] S. Gao, T. He, Z. Zhang, H. Ao, H. Jiang, C. Lee, A motion capturing and energy harvesting hybridized lower-limb system for rehabilitation and sports applications, Adv. Sci. 8 (20) (2021) 2101834.
[6] D. Sethi, S. Bharti, C. Prakash, A comprehensive survey on gait analysis: History, parameters, approaches, pose estimation, and future work, Artif. Intell. Med. 129 (2022) 102314.
[7] Y. Pan, Sports game teaching and high precision sports training system based on virtual reality technology, Entertain. Comput. 50 (2024) 100662.
[8] Z. Cao, T. Simon, S.-E. Wei, Y. Sheikh, Realtime multi-person 2d pose estimation using part affinity fields, in: Proceedings of the IEEE Conference on Computer Vision and Pattern Recognition, 2017, pp. 7291–7299.
[9] H.-S. Fang, S. Xie, Y.-W. Tai, C. Lu, Rmpe: Regional multi-person pose estimation, in: Proceedings of the IEEE International Conference on Computer Vision, 2017, pp. 2334–2343.
[10] M. Rana, V. Mittal, Wearable sensors for real-time kinematics analysis in sports: A review, IEEE Sensors J. 21 (2) (2020) 1187–1207.
[11] M. Andriluka, U. Iqbal, A. Milan, E. Insafutdinov, L. Pishchulin, J. Gall, B. Schiele, PoseTrack: A benchmark for human pose estimation and tracking, 2017, CoRR abs/1710.10000, arXiv:1710.10000, URL: http://arxiv.org/abs/1710.10000.
[12] J. Wang, Z. Wang, F. Gao, H. Zhao, S. Qiu, J. Li, Swimming stroke phase segmentation based on wearable motion capture technique, IEEE Trans. Instrum. Meas. 69 (10) (2020) 8526–8538.
[13] S. Moon, C.-K. Huang, M. Sadeghi, A.E. Akinwuntan, H. Devos, Proof-of-concept of the virtual reality comprehensive balance assessment and training for sensory organization of dynamic postural control, Front. Bioeng. Biotechnol. 9 (2021) 678006.
[14] M. Andriluka, L. Pishchulin, P. Gehler, B. Schiele, 2D human pose estimation: New benchmark and state of the art analysis, in: IEEE Conference on Computer Vision and Pattern Recognition, CVPR, 2014.
[15] R. Liao, S. Yu, W. An, Y. Huang, A model-based gait recognition method with body pose and human prior knowledge, Pattern Recognit. 98 (2020) 107069.
[16] Z. Cao, H. Gao, K. Mangalam, Q.-Z. Cai, M. Vo, J. Malik, Long-term human motion prediction with scene context, in: Computer Vision–ECCV 2020: 16th European Conference, Glasgow, UK, August 23–28, 2020, Proceedings, Part I 16, Springer, 2020, pp. 387–404.
[17] L. Wang, D. Li, Y. Zhu, L. Tian, Y. Shan, Dual super-resolution learning for semantic segmentation, in: Proceedings of the IEEE/CVF Conference on Computer Vision and Pattern Recognition, 2020, pp. 3774–3783.
[18] B. Cheng, B. Xiao, J. Wang, H. Shi, T.S. Huang, L. Zhang, Higherhrnet: Scale-aware representation learning for bottom-up human pose estimation, in: Proceedings of the IEEE/CVF Conference on Computer Vision and Pattern Recognition, 2020, pp. 5386–5395.
[19] K. He, X. Zhang, S. Ren, J. Sun, Deep residual learning for image recognition, in: Proceedings of the IEEE Conference on Computer Vision and Pattern Recognition, 2016, pp. 770–778.
[20] Y. Xiu, J. Yang, D. Tzionas, M.J. Black, Icon: Implicit clothed humans obtained from normals, in: 2022 IEEE/CVF Conference on Computer Vision and Pattern Recognition, CVPR, IEEE, 2022, pp. 13286–13296.
[21] T. Xu, W. Takano, Graph stacked hourglass networks for 3d human pose estimation, in: Proceedings of the IEEE/CVF Conference on Computer Vision and Pattern Recognition, 2021, pp. 16105–16114.
[22] K. Simonyan, A. Zisserman, Very deep convolutional networks for large-scale image recognition, 2014, arXiv preprint arXiv:1409.1556.
[23] M. Sandler, A. Howard, M. Zhu, A. Zhmoginov, L.-C. Chen, Mobilenetv2: Inverted residuals and linear bottlenecks, in: Proceedings of the IEEE Conference on Computer Vision and Pattern Recognition, 2018, pp. 4510–4520.
[24] W. Chen, Z. Jiang, H. Guo, X. Ni, Fall detection based on key points of human-skeleton using openpose, Symmetry 12 (5) (2020) 744.
[25] Y. Li, X. Chen, C. Kong, L. Dai, Y. Huang, A deep hourglass-structured fusion model for efficient single image dehazing, Multimedia Tools Appl. 81 (24) (2022) 35247–35260.
[26] C. Zhou, T. Huang, X. Luo, J. Kaner, X. Fu, Cluster analysis of kitchen cabinet operation posture based on OpenPose technology, Int. J. Ind. Ergon. 91 (2022) 103352.
[27] M. Zanfir, A. Zanfir, E.G. Bazavan, W.T. Freeman, R. Sukthankar, C. Sminchisescu, Thundr: Transformer-based 3d human reconstruction with markers, in: Proceedings of the IEEE/CVF International Conference on Computer Vision, 2021, pp. 12971–12980.
[28] H. Liu, C. Zhang, Y. Deng, T. Liu, Z. Zhang, Y.-F. Li, Orientation cues-aware facial relationship representation for head pose estimation via transformer, IEEE Trans. Image Process. 32 (2023) 6289–6302.
[29] H. Liu, C. Zhang, Y. Deng, B. Xie, T. Liu, Y.-F. Li, TransIFC: Invariant cues-aware feature concentration learning for efficient fine-grained bird image classification, IEEE Trans. Multimed. (2023).
[30] H. Liu, Q. Zhou, C. Zhang, J. Zhu, T. Liu, Z. Zhang, Y.-F. Li, Mmatrans: Muscle movement aware representation learning for facial expression recognition via transformers, IEEE Trans. Ind. Inform. (2024).
[31] Y. Chen, Y. Tian, M. He, Monocular human pose estimation: A survey of deep learning-based methods, Comput. Vis. Image Underst. 192 (2020) 102897.
[32] V. Mazzia, S. Angarano, F. Salvetti, F. Angelini, M. Chiaberge, Action transformer: A self-attention model for short-time pose-based human action recognition, Pattern Recognit. 124 (2022) 108487.
[33] Y. Liu, P. Sun, N. Wergeles, Y. Shang, A survey and performance evaluation of deep learning methods for small object detection, Expert Syst. Appl. 172 (2021) 114602.
[34] J. Wang, F. Li, S. Lv, L. He, C. Shen, Physically realizable adversarial creating attack against vision-based BEV space 3D object detection, IEEE Trans. Image Process. (2025).
[35] J. Wang, F. Li, L. He, A unified framework for adversarial patch attacks against visual 3D object detection in autonomous driving, IEEE Trans. Circuits Syst. Video Technol. (2025).
[36] C. Wang, J. Li, W. Liu, C. Qian, C. Lu, Hmor: Hierarchical multi-person ordinal relations for monocular multi-person 3d pose estimation, in: Computer Vision–ECCV 2020: 16th European Conference, Glasgow, UK, August 23–28, 2020, Proceedings, Part III 16, Springer, 2020, pp. 242–259.
[37] R. Gu, G. Wang, J.-N. Hwang, Exploring severe occlusion: Multi-person 3d pose estimation with gated convolution, in: 2020 25th International Conference on Pattern Recognition, ICPR, IEEE, 2021, pp. 8243–8250.
[38] Z. Ghasemi-Naraghi, A. Nickabadi, R. Safabakhsh, Towards reliable multi-person pose estimation using conditional random fields, Pattern Recognit. Lett. 175 (2023) 59–65.

[39] Z. Ma, D. Tian, M. Zhang, D. He, Multi-person pose estimation on embedded device, in: 2020 International Conference on Intelligent Computing and Human-Computer Interaction, ICHCI, IEEE, 2020, pp. 57–61.
[40] S. Kim, S. Shin, S. Lee, K. Choi, Y. Kim, Learning visual clue for UWB-based multi-person pose estimation, Knowl.-Based Syst. 284 (2024) 111289.
[41] P.P. Selvi, V. Sangeetha, D. Saravanan, J. Manikandan, et al., Estimated posture for human elbow flexion in acoustic environments, in: 2023 4th International Conference on Smart Electronics and Communication, ICOSEC, IEEE, 2023, pp. 1122–1126.
[42] N. Louis, L. Zhou, S.J. Yule, R.D. Dias, M. Manojlovich, F.D. Pagani, D.S. Likosky, J.J. Corso, Temporally guided articulated hand pose tracking in surgical videos, Int. J. Comput. Assist. Radiol. Surg. 18 (1) (2023) 117–125.
[43] S. Juraev, A. Ghimire, J. Alikhanov, V. Kakani, H. Kim, Exploring human pose estimation and the usage of synthetic data for elderly fall detection in real-world surveillance, IEEE Access 10 (2022) 94249–94261.
[44] W. Chaoyi, Y. Hua, T. Song, Z. Xue, R. Ma, N. Robertson, H. Guan, Fine-grained pose temporal memory module for video pose estimation and tracking, in: ICASSP 2021-2021 IEEE International Conference on Acoustics, Speech and Signal Processing, ICASSP, IEEE, 2021, pp. 2205–2209.
[45] S. Kreiss, L. Bertoni, A. Alahi, Openpifpaf: Composite fields for semantic keypoint detection and spatio-temporal association, IEEE Trans. Intell. Transp. Syst. 23 (8) (2021) 13498–13511.
[46] P. Dendorfer, A. Osep, A. Milan, K. Schindler, D. Cremers, I. Reid, S. Roth, L. Leal-Taixé, Motchallenge: A benchmark for single-camera multiple target tracking, Int. J. Comput. Vis. 129 (2021) 845–881.
[47] S. Yang, Z. Feng, Z. Wang, Y. Li, S. Zhang, Z. Quan, S.-t. Xia, W. Yang, Detecting and grouping keypoints for multi-person pose estimation using instance-aware attention, Pattern Recognit. 136 (2023) 109232.
[48] Y. Huang, H.P. Shum, E.S. Ho, N. Aslam, High-speed multi-person pose estimation with deep feature transfer, Comput. Vis. Image Underst. 197 (2020) 103010.
[49] W. Mao, Z. Tian, X. Wang, C. Shen, Fcpose: Fully convolutional multi-person pose estimation with dynamic instance-aware convolutions, in: Proceedings of the IEEE/CVF Conference on Computer Vision and Pattern Recognition, 2021, pp. 9034–9043.
[50] L. Zhang, J. Liu, Y. Wei, D. An, X. Ning, Self-supervised learning-based multi-source spectral fusion for fruit quality evaluation: A case study in mango fruit ripeness prediction, Inf. Fusion 117 (2025) 102814.
[51] J. Huang, X. Yu, D. An, X. Ning, J. Liu, P. Tiwari, Uniformity and deformation: A benchmark for multi-fish real-time tracking in the farming, Expert Syst. Appl. 264 (2025) 125653.
[52] Y. Zhao, Z. Luo, C. Quan, D. Liu, G. Wang, Cluster-wise learning network for multi-person pose estimation, Pattern Recognit. 98 (2020) 107074.
[53] O. Poursaeed, T. Jiang, H. Qiao, N. Xu, V.G. Kim, Self-supervised learning of point clouds via orientation estimation, in: 2020 International Conference on 3D Vision (3DV), IEEE, 2020, pp. 1018–1028.
[54] R. Krishnan, P. Rajpurkar, E.J. Topol, Self-supervised learning in medicine and healthcare, Nat. Biomed. Eng. 6 (12) (2022) 1346–1352.
[55] S. He, X. Ye, T. Sakurai, CLOP-hERG: The contrastive learning optimized pre-trained model for representation learning in predicting drug-induced hERG channel blockers, Medinformatics 1 (3) (2024) 103–111.
[56] I. Misra, L.v.d. Maaten, Self-supervised learning of pretext-invariant representations, in: Proceedings of the IEEE/CVF Conference on Computer Vision and Pattern Recognition, 2020, pp. 6707–6717.
[57] Y. Khaledian, B.A. Miller, Selecting appropriate machine learning methods for digital soil mapping, Appl. Math. Model. 81 (2020) 401–418.
[58] H. Lin, Artificial intelligence with great potential in medical informatics: a brief review, Medinformatics 1 (1) (2024) 2–9.
[59] A. Sengupta, F. Jin, R. Zhang, S. Cao, mm-Pose: Real-time human skeletal posture estimation using mmwave radars and CNNs, IEEE Sensors J. 20 (17) (2020) 10032–10044.
[60] Y. Rong, T. Shiratori, H. Joo, Frankmocap: A monocular 3d whole-body pose estimation system via regression and integration, in: Proceedings of the IEEE/CVF International Conference on Computer Vision, 2021, pp. 1749–1759.
[61] L. Ma, K. Huang, D. Wei, Z. Ming, H. Shen, Fda-gan: Flow-based dual attention gan for human pose transfer, IEEE Trans. Multimed. 25 (2021) 930–941.
[62] M.B. Gamra, M.A. Akhloufi, A review of deep learning techniques for 2D and 3D human pose estimation, Image Vis. Comput. 114 (2021) 104282.
[63] Y. Ding, Q. Zhu, X. Liu, W. Yuan, H. Zhang, C. Zhang, Kd-mvs: Knowledge distillation based self-supervised learning for multi-view stereo, in: European Conference on Computer Vision, Springer, 2022, pp. 630–646.
[64] A. Kodipalli, S.L. Fernandes, S.K. Dasar, T. Ismail, Computational framework of inverted fuzzy C-means and quantum convolutional neural network towards accurate detection of ovarian tumors, Int. J. E-Heal. Med. Commun. (IJEHMC) 14 (1) (2023) 1–16.
[65] X.-H. Pham, F. Bonne, M. Alamir, On the use of gradient-based solver and deep learning approach in hierarchical control: Application to grand refrigerators, Cybern. Syst. (2023) 1–19.
[66] X. Hu, L. Lin, A. Liu, L. Wen, S.Y. Philip, et al., A multi-level supervised contrastive learning framework for low-resource natural language inference, IEEE/ACM Trans. Audio Speech Lang. Process. (2023).
[67] Y. Moukafih, N. Sbihi, M. Ghogho, K. Smaili, SuperConText: supervised contrastive learning framework for textual representations, IEEE Access 11 (2023) 16820–16830.
[68] N. Subramanian, N.B. S, R. S, An optimal modified bidirectional generative adversarial network for security authentication in cloud environment, Cybern. Syst. (2024) 1–33.
[69] M. Sannidhan, J.E. Martis, R.S. Nayak, S.K. Aithal, K. Sudeepa, Detection of antibiotic constituent in Aspergillus flavus using quantum convolutional neural network, Int. J. E-Heal. Med. Commun. (IJEHMC) 14 (1) (2023) 1–26.
[70] K. Li, Y. Zhang, S. Chen, Digital transformation and organizational resilience of manufacturing enterprises under the background of green technological innovation, J. Xi'an Univ. Financ. Econ. 37 (04) (2024) 84–96, http://dx.doi.org/10.19331/j.cnki.jxufe.2024.04.003, URL: https://link.cnki.net/doi/10.19331/j.cnki.jxufe.2024.04.003, Xi'an University of Finance and Economics.
[71] Y. Yu, L. Zhenhua, New development concept to accelerate the formation of new productive forces: Theoretical logic and implementation path, J. Xi'an Univ. Financ. Econ. 37 (02) (2024) 3–14.
[72] Q. Zhao, C. Zheng, M. Liu, P. Wang, C. Chen, Poseformerv2: Exploring frequency domain for efficient and robust 3d human pose estimation, in: Proceedings of the IEEE/CVF Conference on Computer Vision and Pattern Recognition, 2023, pp. 8877–8886.
[73] Y. Li, S. Zhang, Z. Wang, S. Yang, W. Yang, S.-T. Xia, E. Zhou, Tokenpose: Learning keypoint tokens for human pose estimation, in: Proceedings of the IEEE/CVF International Conference on Computer Vision, 2021, pp. 11313–11322.
[74] S. Mroz, N. Baddour, C. McGuirk, P. Juneau, A. Tu, K. Cheung, E. Lemaire, Comparing the quality of human pose estimation with blazepose or openpose, in: 2021 4th International Conference on Bio-Engineering for Smart Technologies, BioSMART, IEEE, 2021, pp. 1–4.
[75] H. Xia, Q. Zhang, VitPose: Multi-view 3D human pose estimation with vision transformer, in: 2022 IEEE 8th International Conference on Computer and Communications, ICCC, IEEE, 2022, pp. 1922–1927.