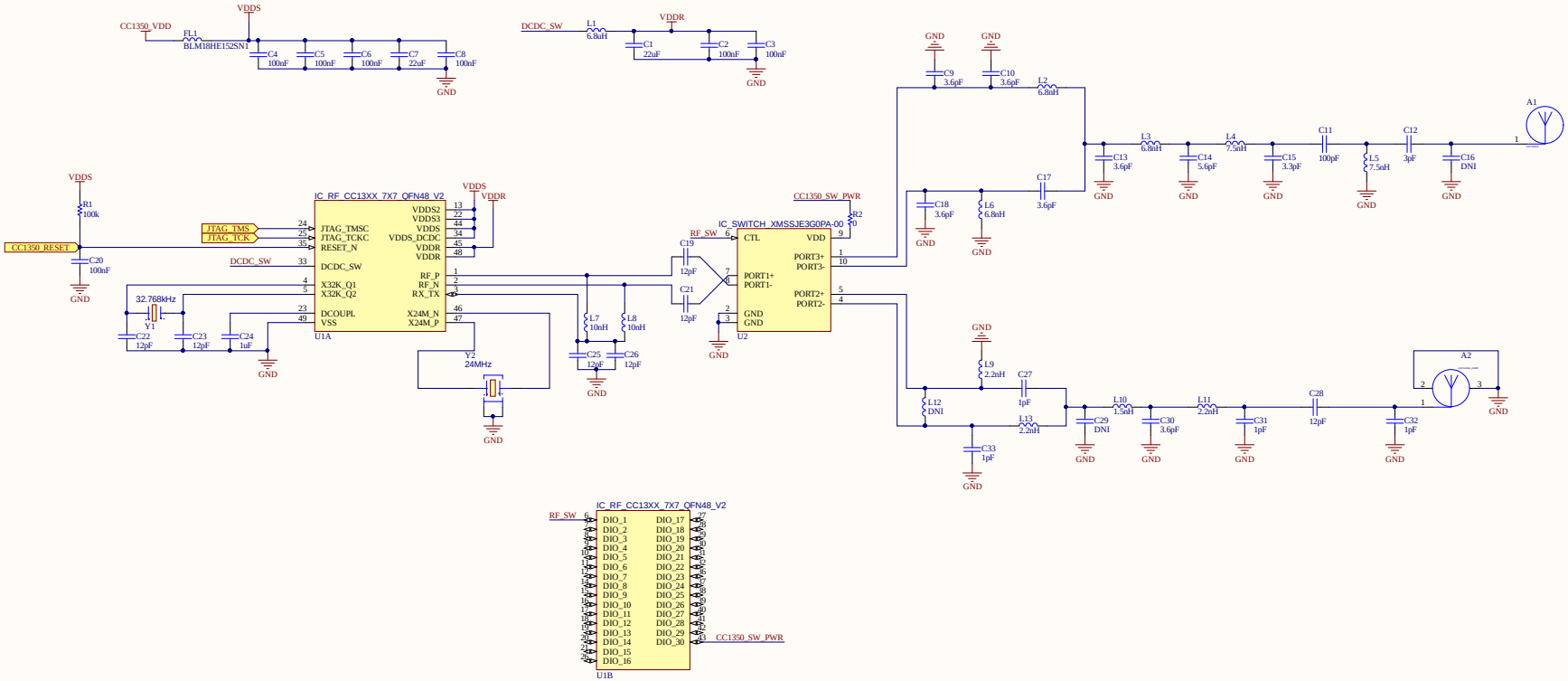

Title		
Size A	Number	Revision
Date: 10/30/2018	Sheet of	
File: C:\Users\..\Microcontroller_CC1350.SchDoc	Drawn By:	