IAM3D Rover Project Report

University of Hartford – ASME Team

Figure 1. Final IAM3D rover platform with radio transmitter and FPV monitor.

Biraj Kakadiya

Prepared for submission

Role highlight: Programming, electronics integration, rover control, and final system debugging

1. Introduction

The IAM3D Rover Project was developed by the ASME student chapter at the University of Hartford to design, build, and compete with a fully functional rover manufactured primarily through additive manufacturing. The project combined mechanical design, electronics integration, embedded programming, radio control, and field testing in a compressed timeline.

The final system was a tracked rover with a front-mounted arm, remote-control operation, and FPV capability. Despite limited time and the challenge of coordinating a student team, the rover performed successfully in competition and earned second place.

2. Project Objectives

- Design and fabricate a competition-ready 3D-printed rover platform.
- Integrate tracked locomotion, arm actuation, radio control, and FPV operation.
- Develop stable embedded control software on the ESP32 platform.
- Validate the complete system under real operating conditions before competition.

3. System Overview

The rover consists of four tightly coupled subsystems: the mechanical chassis and tracks, the electrical power and motor driver network, the embedded controller and receiver interface, and the operator control/FPV layer. A simplified block diagram is shown below.

Figure 2. Rover System Block Diagram

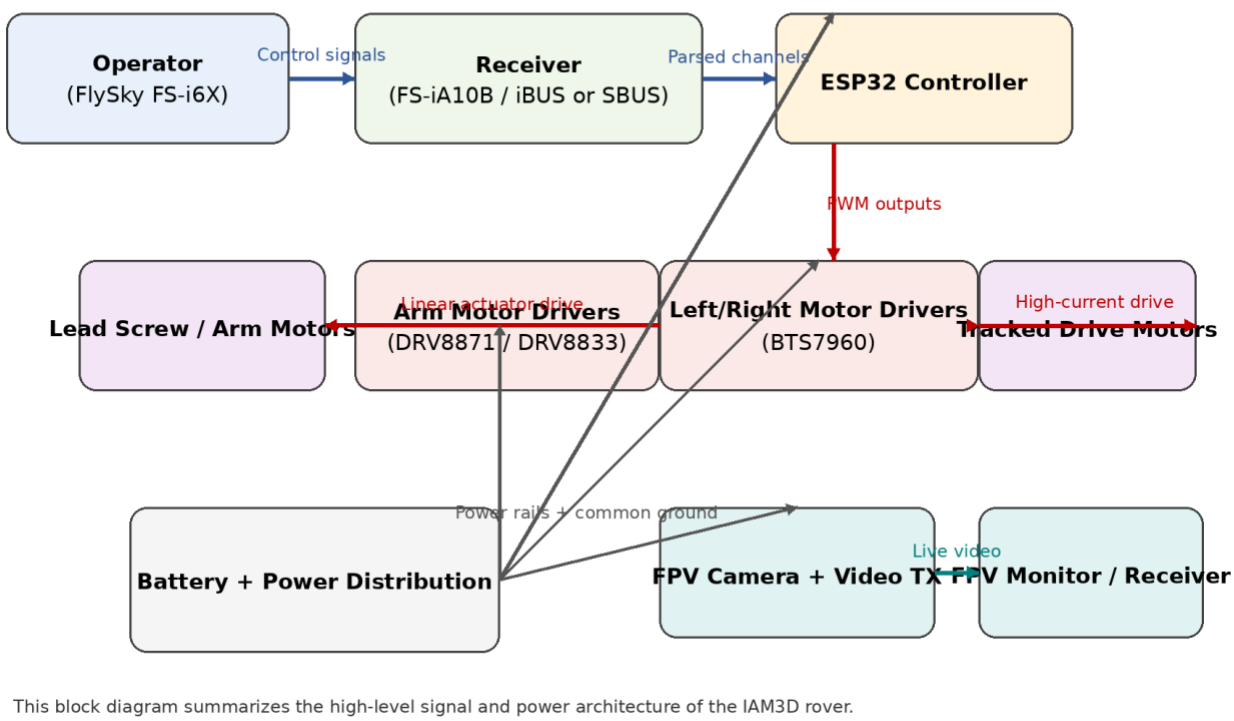

Figure 2. High-level rover system block diagram.

3.1 Mechanical Subsystem

- 3D-printed chassis and body enclosure
- Tracked drive system for traction and stability
- Front arm mechanism with lead screw / bucket-style end effector
- Compact packaging for electronics, radio receiver, and FPV components

3.2 Electrical and Embedded Subsystem

- Battery-powered drive architecture with shared common ground
- ESP32 microcontroller for real-time control logic
- BTS7960 motor drivers for left and right track motors
- DRV8871 / DRV8833 class drivers for arm motor channels
- FlySky receiver interface using standard RC channel inputs

4. Wiring Diagram

The following simplified wiring diagram shows the major electrical relationships used in the rover. It is intended as a report-level architecture view rather than a manufacturing schematic. The diagram emphasizes power distribution, signal flow, and grounding strategy.

Figure 3. Simplified Wiring Diagram

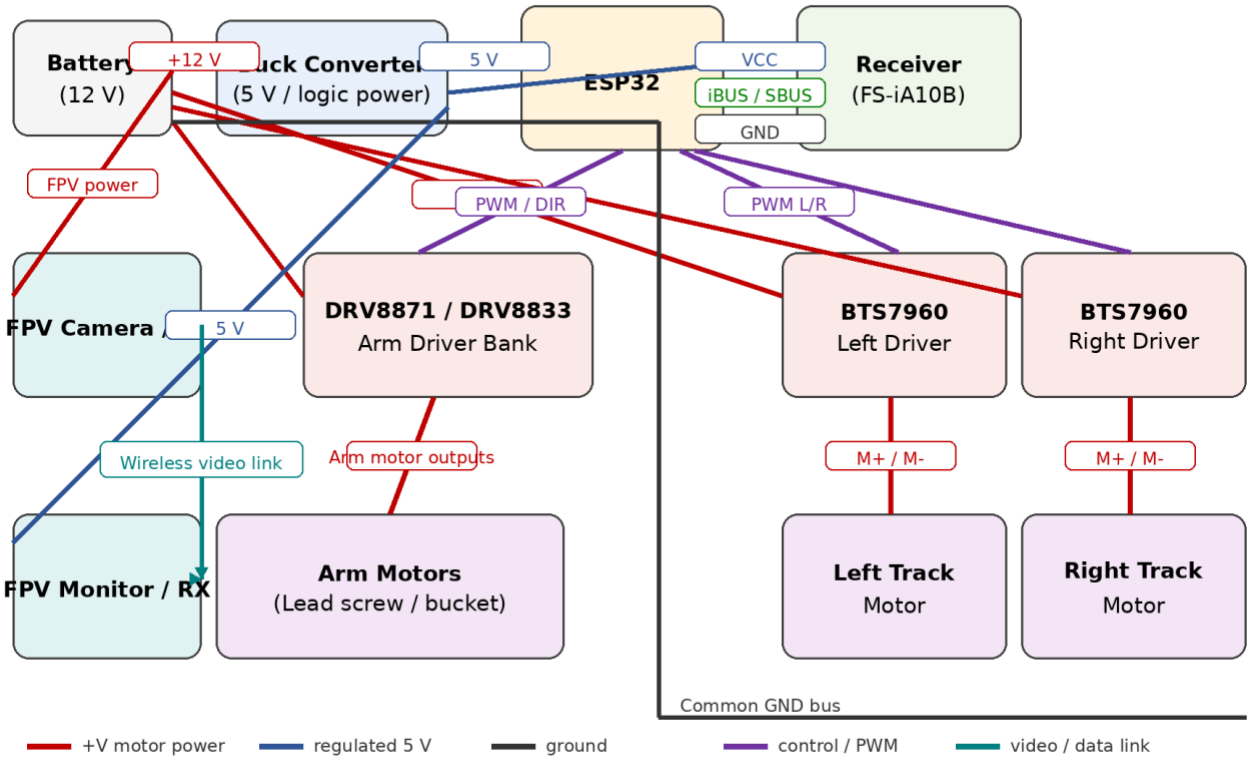

Figure 3. Simplified wiring diagram for power, control, and FPV connections.

4.1 Wiring Notes

- A common ground reference was essential between the battery system, ESP32, receiver, and motor drivers.
- The high-current motor path remained separate from logic-level control wiring except for the shared reference ground.
- A regulated 5 V supply was used for the ESP32, radio receiver, and low-power peripherals.
- PWM and direction signals from the ESP32 were routed to motor drivers rather than directly to motors.

5. Control System Flow

The rover control loop continuously reads radio input, validates the signal, maps commands to motion outputs, and updates the track and arm drivers. Safety handling was critical because competition performance depended on stable response under pressure.

Figure 4. Rover Control System Flowchart

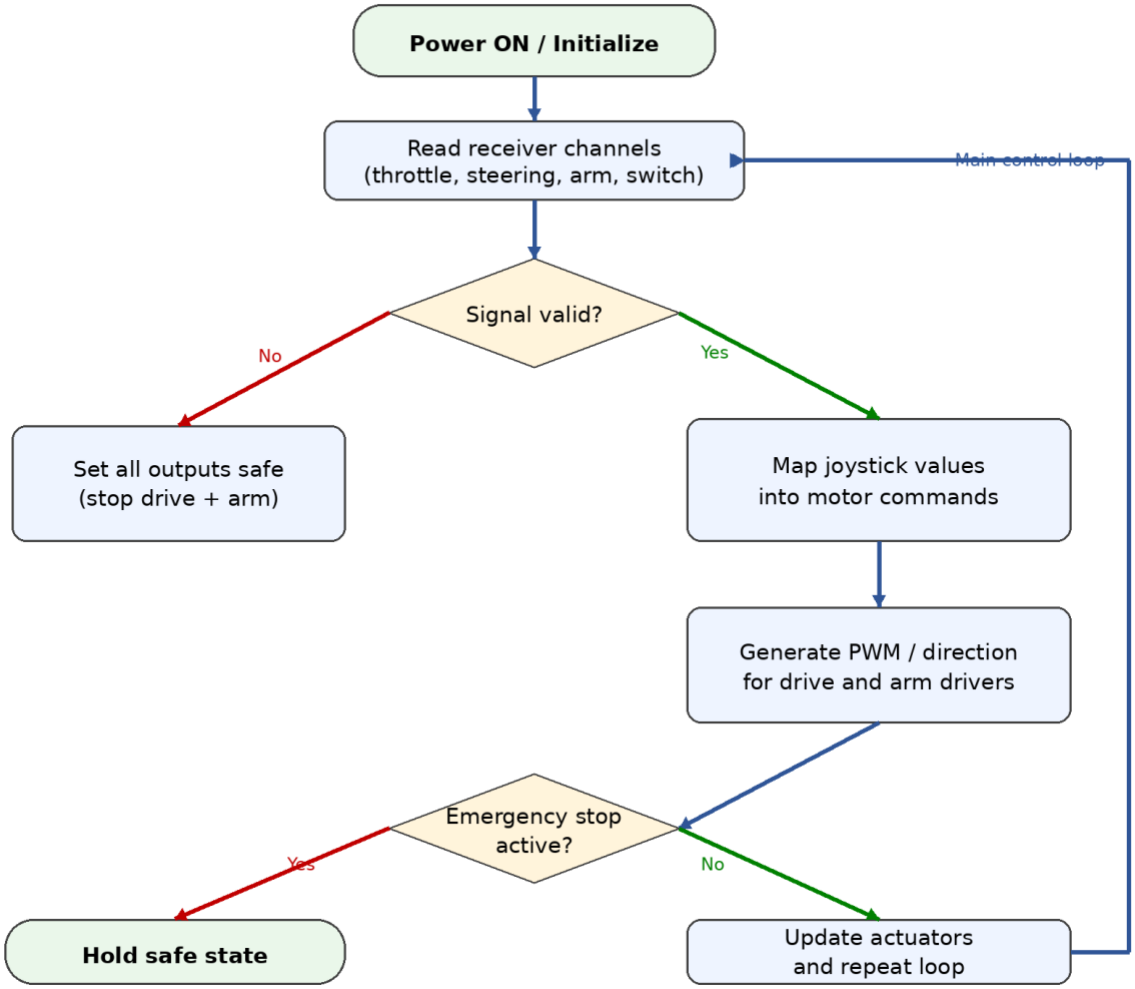

Figure 4. Main rover control system flowchart.

5.1 Control Logic Summary

- Initialize controller, receiver input, and motor outputs at startup.
- Read throttle, steering, arm, and auxiliary channel values each cycle.
- Check for signal validity before enabling motion commands.
- Map joystick inputs into differential drive and arm actuation commands.
- Apply emergency stop or safe-state behavior whenever required.

6. My Role and Contributions

I joined the project as Programming Lead, but in the final stage my responsibilities expanded beyond software alone. In addition to embedded control code, I worked on electronics debugging, wiring fixes, driver integration, field testing, and final rover control at the competition.

The most intense work happened in the last days before the event. At that stage, the rover only became fully reliable through repeated hardware-software integration, late-night troubleshooting, and hands-on testing. Those efforts directly contributed to the final competition performance.

- Embedded control logic for rover motion and arm behavior
- Receiver-to-controller integration and command mapping
- Electronics debugging and wiring support
- Final system testing, tuning, and competition operation

7. Challenges and Lessons Learned

The project presented technical and team-management challenges. Time was limited, subsystem dependencies were high, and reliable final integration required rapid iteration. One of the biggest lessons from the project was that engineering leadership requires active ownership. When work is delayed or incomplete, progress depends on stepping in, learning fast, and doing what is necessary to move the system forward.

This experience strengthened my practical skills in embedded systems, motor control, wiring architecture, rapid debugging, and competition-level execution.

8. Competition Result

The rover was competed in Dallas, Texas. Under live conditions, the system demonstrated stable control, successful FPV operation, and reliable motion performance. The team achieved second place in the IAM3D competition, which validated the technical effort and the final integration work completed before the event.

9. Conclusion

The IAM3D Rover Project started as an ambitious student build and became a successful multidisciplinary engineering system. The addition of a clear control architecture, stable wiring strategy, and disciplined testing allowed the rover to perform at a national competition level. This report documents the final system at a submission-ready level and provides diagrams that can support future team builds and design reviews.

10. Team Members and Acknowledgments

This achievement was the result of a full team effort. While I served as Programming Lead and took on major final-stage work in software, electronics, wiring, testing, and competition operation, the rover could not have reached the finish line without the contributions, support, and commitment of many people.

Team Members

- **Carter Pelle**tier - ASME President and project co-lead in setting the direction for the IAM3D Rover initiative.
- **Dakota D'Angelo** - Helped create the opportunity for the project and connect the team with key outside support.
- **Nicholas Halloran** - Secondary lead who supported planning, timeline tracking, CAD coordination, and general project execution.
- **Biraj Kakadiya** - Programming Lead, with major contributions in embedded control, receiver integration, electronics debugging, wiring, final rover operation, and late-stage system reliability.
- **Jake Balula** - Secondary programming lead who supported development decisions, remote-control system planning, and team logistics.
- **Ashton Prathepan** - Electronics lead responsible for wiring, component selection, soldering, and assembly support.
- **Johnathon Paul** - CAD lead who contributed significantly to the chassis and track-system design under time pressure.
- **Gianluc Fagan** - Report lead who helped ensure documentation was completed alongside the build effort.
- **Madison Tierney** - Project administrator who supported logistics, coordination, and travel planning for the competition.

Acknowledgments

- University of Hartford ASME for creating the environment and support structure that allowed this project to happen.
- Chuck Pagano, University of Hartford alumnus, whose generous $10,000 support made materials, components, and build execution possible.
- Faculty, mentors, and supporters who encouraged the team and helped make the competition trip feasible.
- Every team member who stayed committed through design revisions, troubleshooting, long work sessions, and final competition preparation.

The 2nd-place result reflects not only technical work, but also teamwork, persistence, and the willingness to step up when the project needed it most.