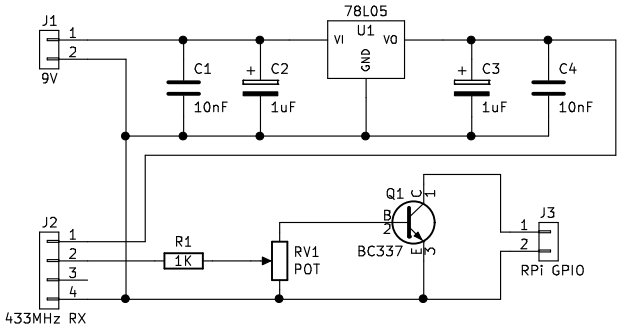

www.systemunique.co.uk
(C) Jason Birch

Sheet: /
File: Pi433MHz.sch

Title: Raspberry Pi 433MHz Reciever

Size: A4	Date: 2019-07-22	**Rev: 1.0.0**
KiCad E.D.A. kicad (2017-02-17 revision 0898b6c)-master		Id: 1/1