© TRW Occupant Safety Systems

THIS DRAWING AND THE DESIGNS AND DATA DEPICTED IN IT ARE THE CONFIDENTIAL PROPERTY OF TRW Inc. AND ITS SUBSIDIARY COMPANIES, WHO RESERVE ALL RIGHTS THEREIN. BY ACCEPTING THIS DRAWING, THE RECIPIENT AGREES NOT TO COPY, USE, MANUFACTURE, OR COMMUNICATE TO OTHERS, WHOLLY OR IN PART, EITHER THIS DRAWING OR THE DESIGNS OR DATA DEPICTED IN IT EXCEPT AS EXPRESSLY AUTHORIZED IN WRITING BY TRW Inc. OR THE TRW SUBSIDIARY COMPANY DELIVERING THIS DRAWING.

IN CASES WHERE VENDORS ARE SUPPLIED 3-D CAD GENERATED DATA FOR THIS PART, THE INFORMATION ON THIS DRAWING TAKES PRECEDENCE OVER SAID DATA

CRITICAL CHARACTERISTICS MARKED (C)

SIGNIFICANT CHARACTERISTICS MARKED (S)

TOOLING REFERENCE CHARACTERISTICS MARKED (T)

GENERAL CHARACTERISTICS MARKED

MUST COMPLY WITH TRW GSQM AND C45 SPECIAL CHARACTERISTICS (OSS GLOBAL) PRODUCT LINE QSS SPECIFICATION

ALL DIMENSIONS APPLY TO THE FINISHED PART INCLUDING SURFACE TREATMENT

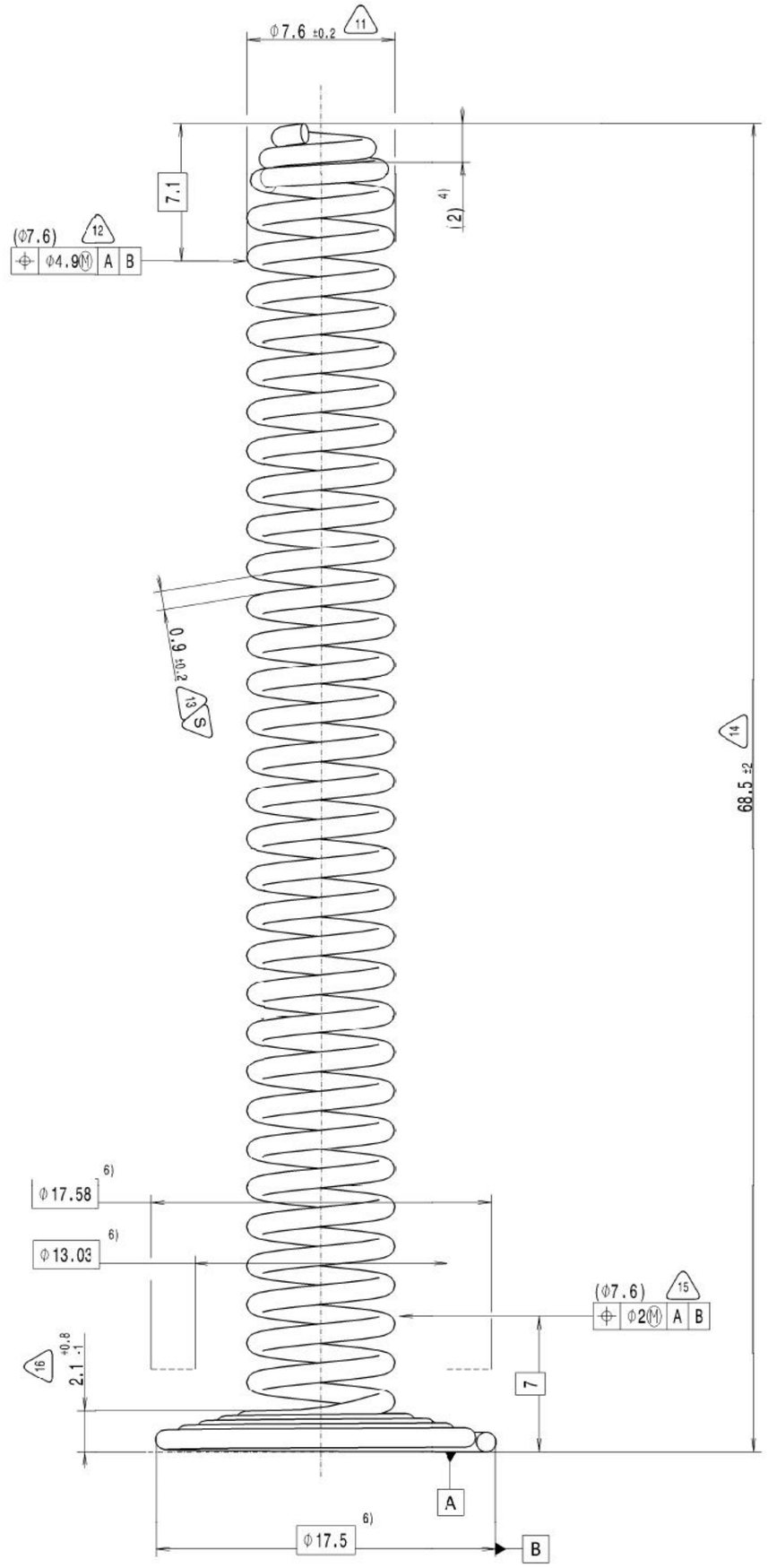

NO. NR.	QA-NO. QA-NR.	NOTES BEMERKUNGEN	VALUE WERT
1)		**DELIVERY DOCUMENTS** LIEFERDOKUMENTE	(1)
2)		**VISUAL INSPECTION** SICHTPRUEFUNG	(2)
3)	16	**NUMBER OF SPRING COILS** ANZAHL DER FEDERNDEN WINDUNGEN	APPROX. 5 (19)
4)		**NUMBER OF NON SPRING COILS** ANZAHL DER NICHTFEDERNDEN WINDUNGEN	APPROX. 2 (20)
5)	17	**CHECK OF MAXIMUM WITH PIN** PRUEFUNG MAXIMUM MIT DORN	
6)	12,15	**REPRODUCTION INSTALLATION SITUATION FOR MEASUREMENT OF POSITION Φ7.6 MEASUREMENT WITH CONTROL DEVICE** NACHBILDUNG EINBAUSITUATION FUER MESSUNG POSITION Φ7.6 MESSUNG MITTELS PRUEFVORRICHTUNG	
7)	12,15	**FOR MEASUREMENT, PRESS DOWN THE SPRING ON THE MARKED AREA IN DIRECTION OF DATUM A** FUER DIE MESSUNG FEDER ANDRUECKFLAECHE AUF BEZUG A NIEDERDRUECKEN	
8)		**TEMPERED BETWEEN:** ANGELASSEN ZWISCHEN:	250 °C - 280 °C (21)

NATERIAL (5)

DIN EN 10270-1-DM 1.0

OPTIONAL
JIS G3522 - SWP-B 1.0

OPTIONAL
ASTM A 228/A 228M 0.039 inch MUSIC STEEL SPRING WIRE PHOSPHATE COATED

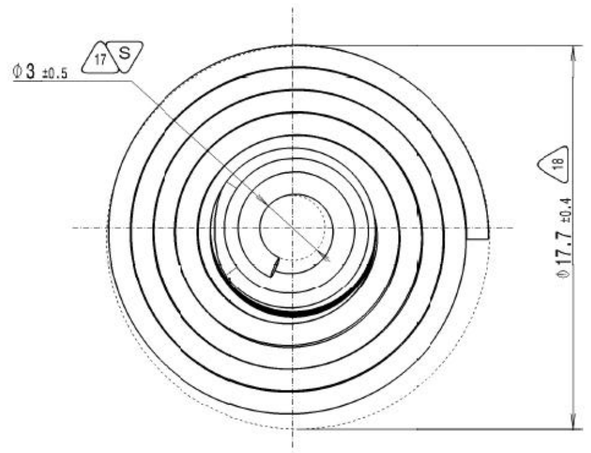

3D 1:1

---	---	---	---
VI	ASTM-A228	2007	STANDARD SPECIFICATION FOR STEEL WIRE, MUSIC SPRING
V	JIS G3522	1991	PIANO WIRES
IV	EN 10270-1	2011	STEEL WIRE FOR MECHANICAL SPRINGS
III	DIN 2095	1973-05	HELICALSPRINGS; QUALITY SPECIFICATION
II	PRA-001-010	-	SURFACE PURITY OF COMPONENTS
I	B_080_3_01_EN	A	CONTROL OF PROHIBITED AND RESTRICTED SUBSTANCES
NO	**DOC-NUMBER**	**REV**	**DESCRIPTION**

ENGINEERING DOCUMENTATION NUMBERS (SPECS, CUSTOMER, DRAWINGS, ETC.)

(THE PART IS USED IN A TEMPERATURE RANGE FROM -40 °C TO 95 °C AND IS FOR A SHORT PERIOD STRESSED DURING INFLATOR FUNCTION WITH A PRESSURE UP TO 650 BAR.)
(DAS BAUTEIL WIRD IN EINEM TEMPERATURBEREICH VON -40 °C BIS 95 °C EINGESETZT UND WAEHREND DER GENERATORFUNKTION KURZZEITIG MIT DRUECKEN BIS ZU 650 BAR BELASTET.)

21

IND.	ZONE	DESCRIPTION	E.R.D.	DATE	NAME	CHK	ENG
---	---	---	---	---	---	---	---
A00	-	INITIAL RELEASE	344429	2014-03-18	-	-	-

CAD SYSTEM: CATIA V5
REF. DRW. NO.
MATERIAL: SEE CHART / SIEHE TABELLE
FINISH/ COATING
CUSTOMER/PLATFORM: SPI2 EVO
MASS (g) CALC. / MEASURE 5.5
SURFACE AREA (cm²)
DESIGNER: SATYAM 2014-03-17
REV.DES.
CHECKER: GREISSLA 2014-04-02
ENGINEER
MODEL YEAR
DENSITY (g/cm³)
UNLESS OTHERWISE SPECIFIED DIMENSIONS A1
SAP NO.
VOLUME (cm³)
TRW AIRBAG SYSTEMS GMBH
D-84544 ASCHAU / INN
GENERAL TOLERANCE: DIN 2095
PREPARED IN ACCORDANCE WITH: TOLERANCING ISO 8015, SIZE ISO 14405
DESCRIPTION: SPRING / FEDER (ANZUENDKANAL)
1st ANGLE PROJECTION (X) / 3rd ANGLE PROJECTION
SCALE: 5:1
DO NOT SCALE PRINT
DRAWING NO.: 34083594
INDEX: A00
PART TYPE: MA
COUNT NO.: 00
PRODUCTION DRAWING RELEASED
FORMAT: A1

Date Last Modified: 2021-06-21 23:16:59 CEST Lifecycle State: Published