GAIN1	GAIN0	Gain (dB)
0	0	28.8
0	1	34.8
1	0	38.4
1	1	40.7

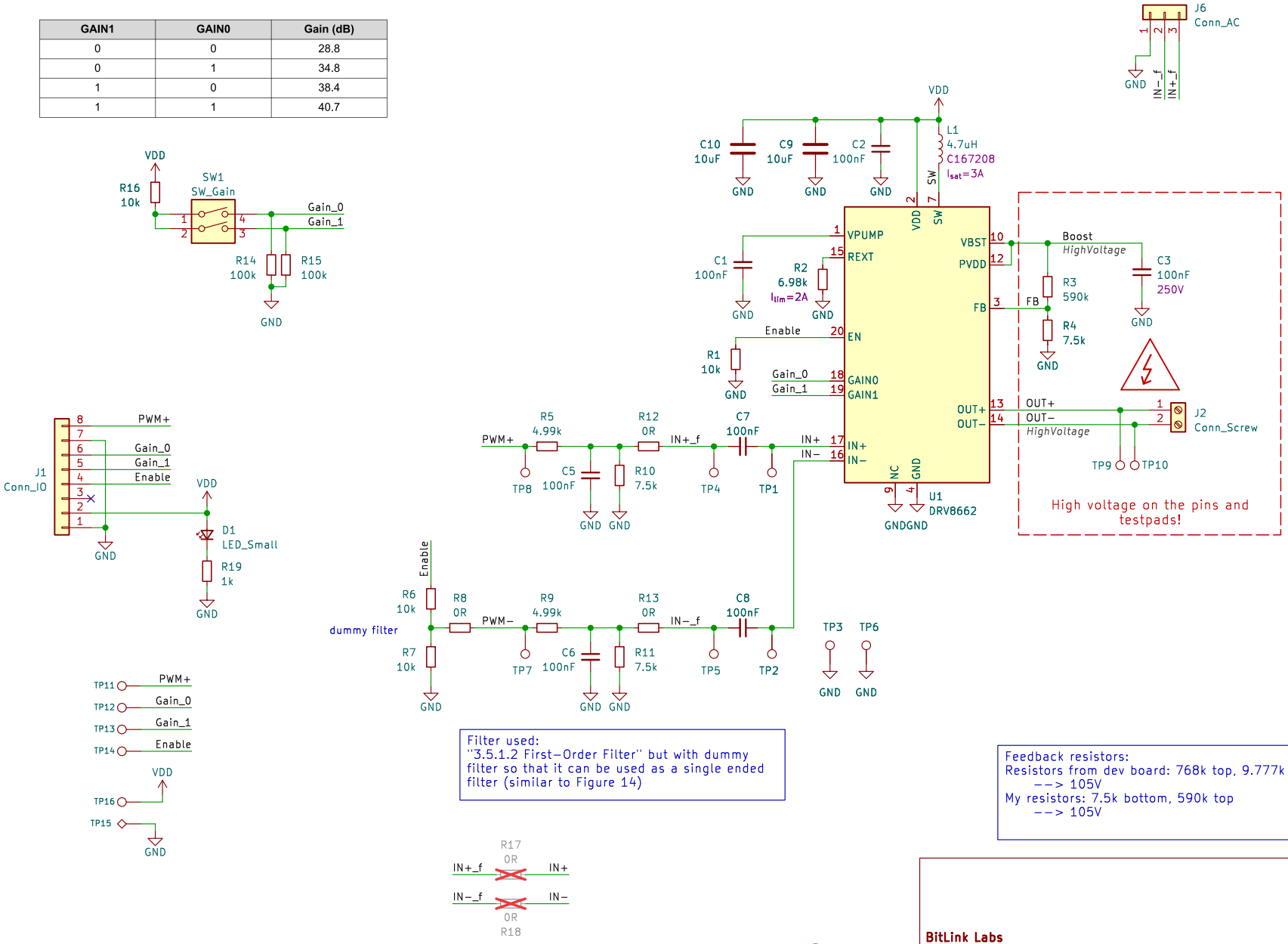

Filter used:
"3.5.1.2 First−Order Filter" but with dummy filter so that it can be used as a single ended filter (similar to Figure 14)

Feedback resistors:
Resistors from dev board: 768k top, 9.777k bottom
−−> 105V
My resistors: 7.5k bottom, 590k top
−−> 105V

$$V_{BOOST} = V_{FB}\left(1 + \frac{R_1}{R_2}\right)$$

where V_{FB} = 1.32 V.

BitLink Labs

Sheet: /
File: DRV8662_Breakout_Rev2.kicad_sch

Title: DRV8662 Breakout

Size: A4	Date: 2024−03−27	**Rev: 2**
KiCad E.D.A. kicad (7.0.0)		Id: 1/1