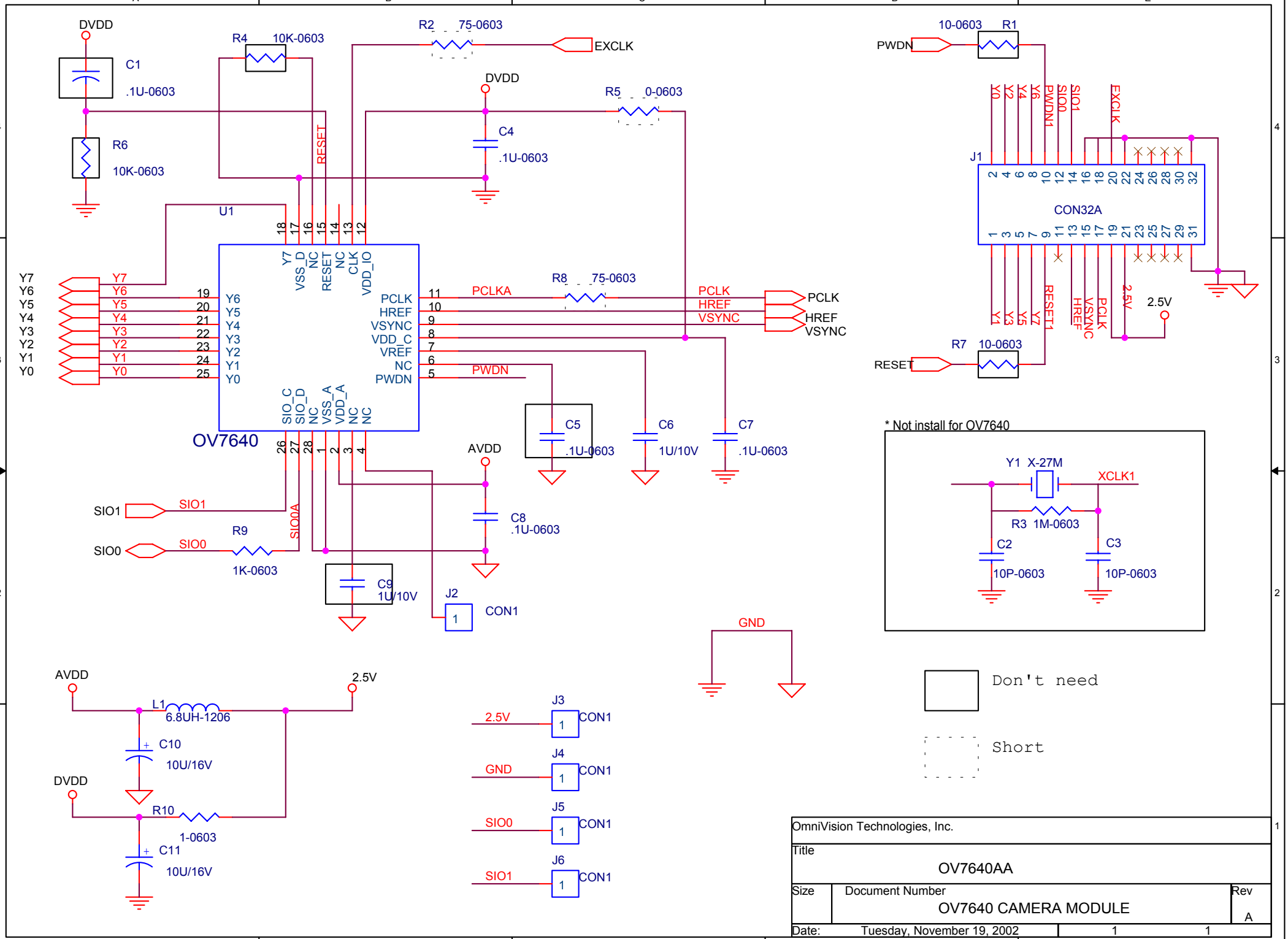
DVDD
C1
.1U-0603
R6
10K-0603
R4
10K-0603
R2
75-0603
EXCLK
DVDD
R5
0-0603
C4
.1U-0603
RESET
U1
OV7640
Y7
Y6
Y5
Y4
Y3
Y2
Y1
Y0
VSS_D
NC
RESET
NC
CLK
VDD_IO
PCLK
HREF
VSYNC
VDD_C
VREF
NC
PWDN
SIO_C
SIO_D
NC
VSS_A
VDD_A
NC
NC
R8
75-0603
PCLKA
PCLK
HREF
VSYNC
PWDN
C5
.1U-0603
C6
1U/10V
C7
.1U-0603
AVDD
C8
.1U-0603
SIO1
SIO0
R9
1K-0603
C9
1U/10V
J2
CON1
GND
10-0603
R1
PWDN
J1
CON32A
EXCLK
SIO1
SIO0
PWDN1
RESET1
2.5V
R7
10-0603
RESET
* Not install for OV7640
Y1
X-27M
XCLK1
R3
1M-0603
C2
10P-0603
C3
10P-0603
AVDD
L1
6.8UH-1206
2.5V
C10
10U/16V
DVDD
R10
1-0603
C11
10U/16V
J3
CON1
J4
CON1
J5
CON1
J6
CON1
Don't need
Short
OmniVision Technologies, Inc.
Title
OV7640AA
Size
Document Number
OV7640 CAMERA MODULE
Rev
A
Date:
Tuesday, November 19, 2002
1
1