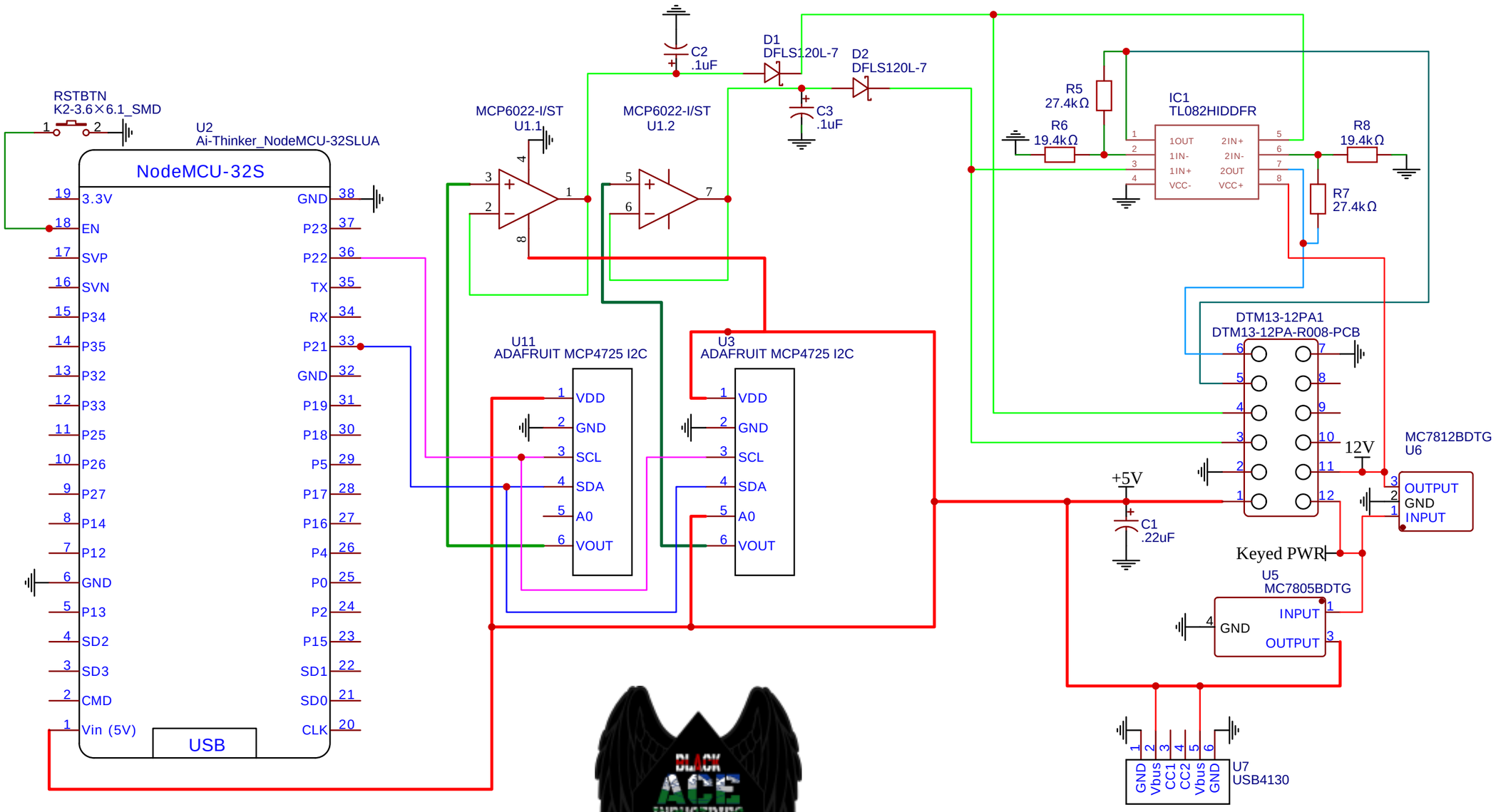

TITLE: OpenGradeX GradeControl Module	REV: 1.2.2
Company: Black Ace Industries	Sheet: 1/1
Date: 2022-03-05 Drawn By: Black Ace	