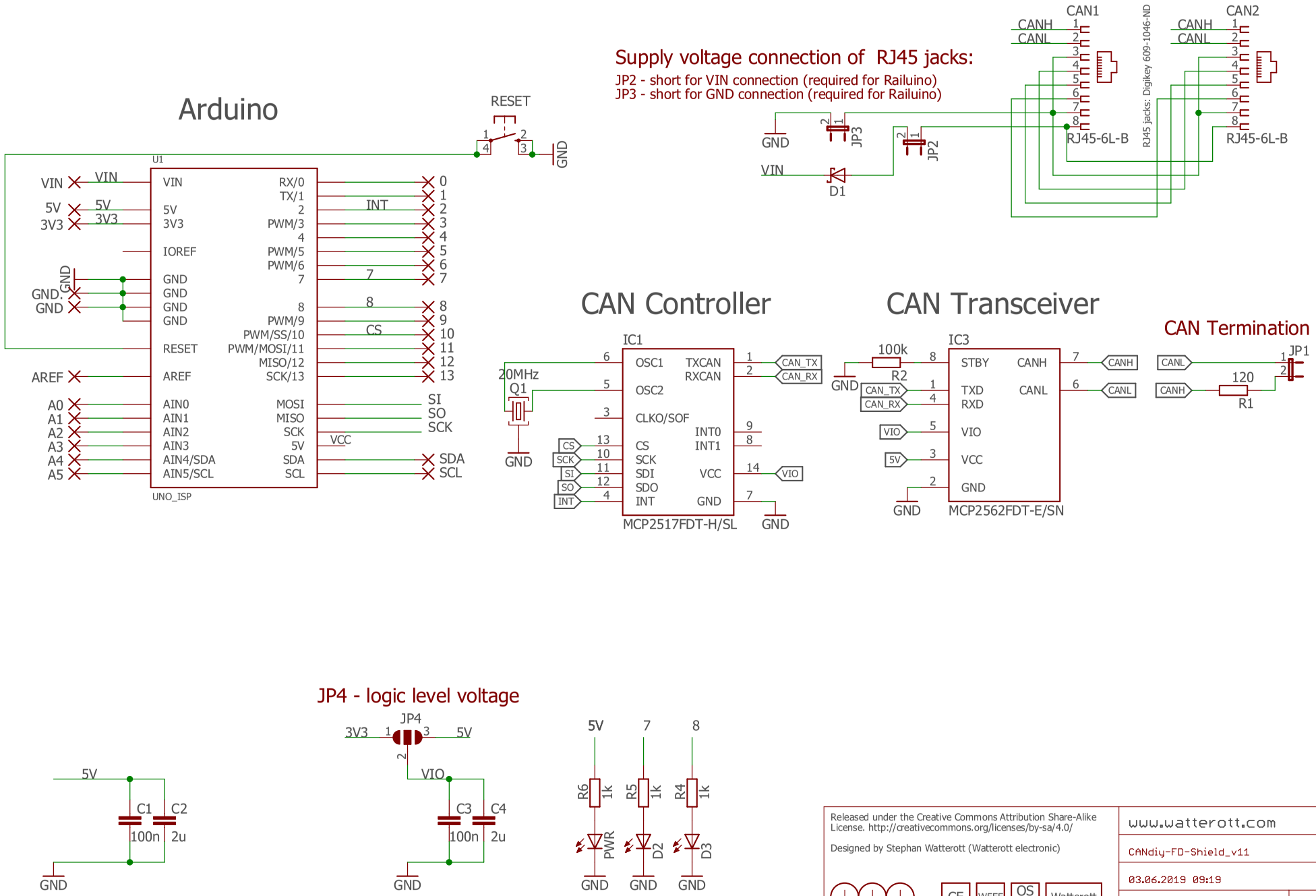

Released under the Creative Commons Attribution Share-Alike License. http://creativecommons.org/licenses/by-sa/4.0/

Designed by Stephan Watterott (Watterott electronic)

CE WEEE OS HW Watterott

www.watterott.com

CANdiy-FD-Shield_v11

03.06.2019 09:19

Sheet: 1/1

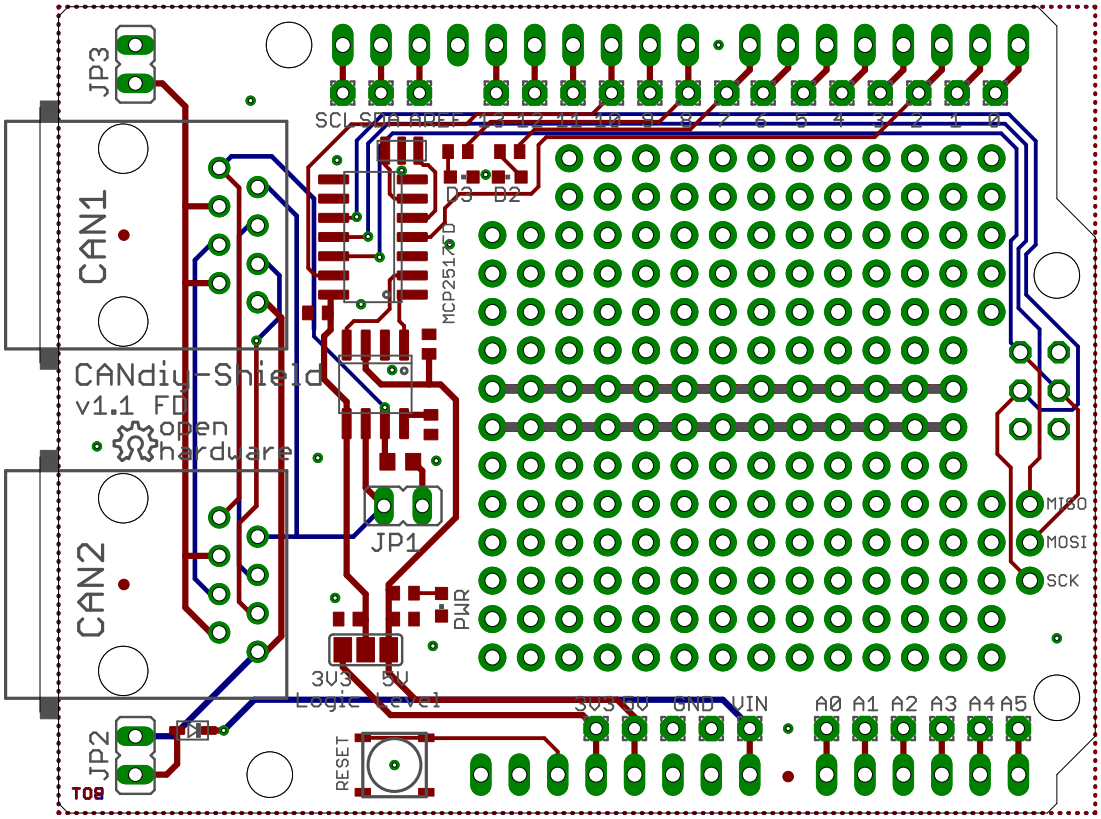
JP3
CAN1
CANdiy-Shield
v1.1 FD
open
hardware
CAN2
JP2
TOP
SCL SDA
D3 B2
MCP2517FD
JP1
PWR
3V3 5V
Logic Level
RESET
3V3 5V GND VIN
A0 A1 A2 A3 A4 A5
MISO
MOSI
SCK