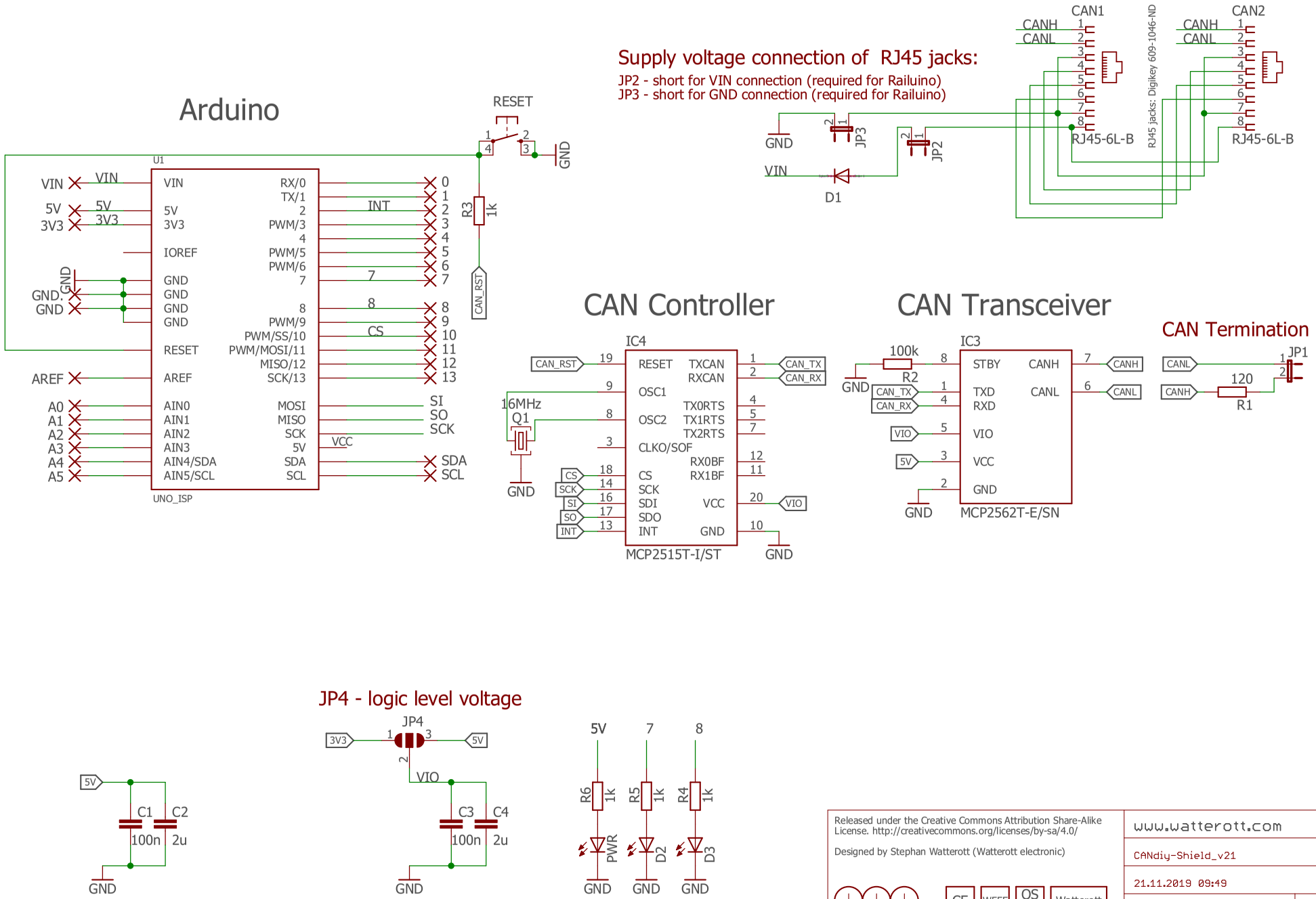

Released under the Creative Commons Attribution Share-Alike License. http://creativecommons.org/licenses/by-sa/4.0/

Designed by Stephan Watterott (Watterott electronic)

CE WEEE OS HW Watterott

www.watterott.com

CANdiy-Shield_v21

21.11.2019 09:49

Sheet: 1/1

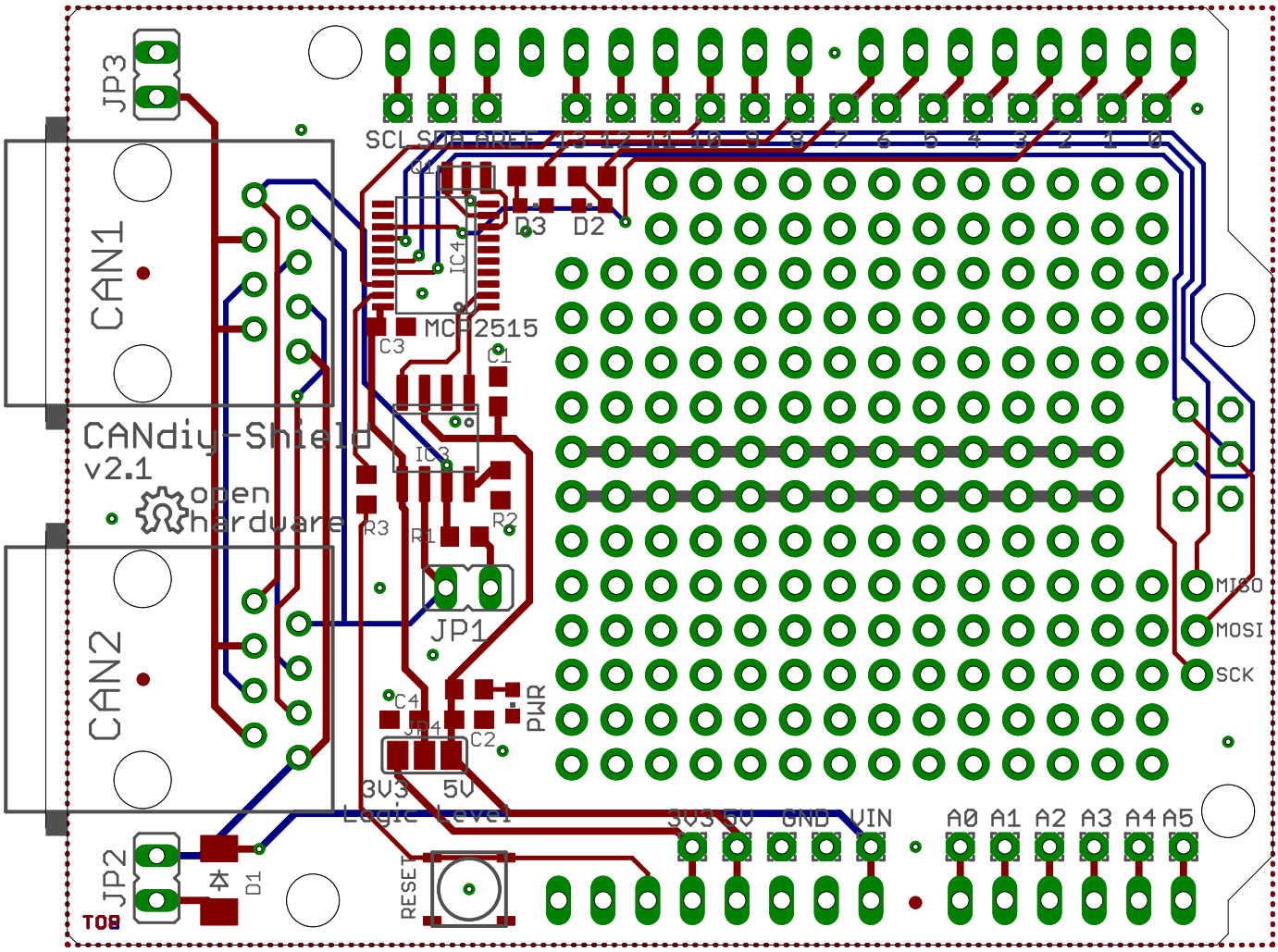
JP3
CAN1
CANdiy-Shield
v2.1
open
hardware
CAN2
JP2
TOP
D1
SCL SDA AREF 13 12 11 10 9 8 7 6 5 4 3 2 1 0
Q1
D3
D2
IC4
MCP2515
C3
C1
IC3
R3
R1
R2
JP1
C4
JP4
C2
PWR
3V3
5V
Logic level
RESET
3V3 5V GND VIN
A0 A1 A2 A3 A4 A5
MISO
MOSI
SCK

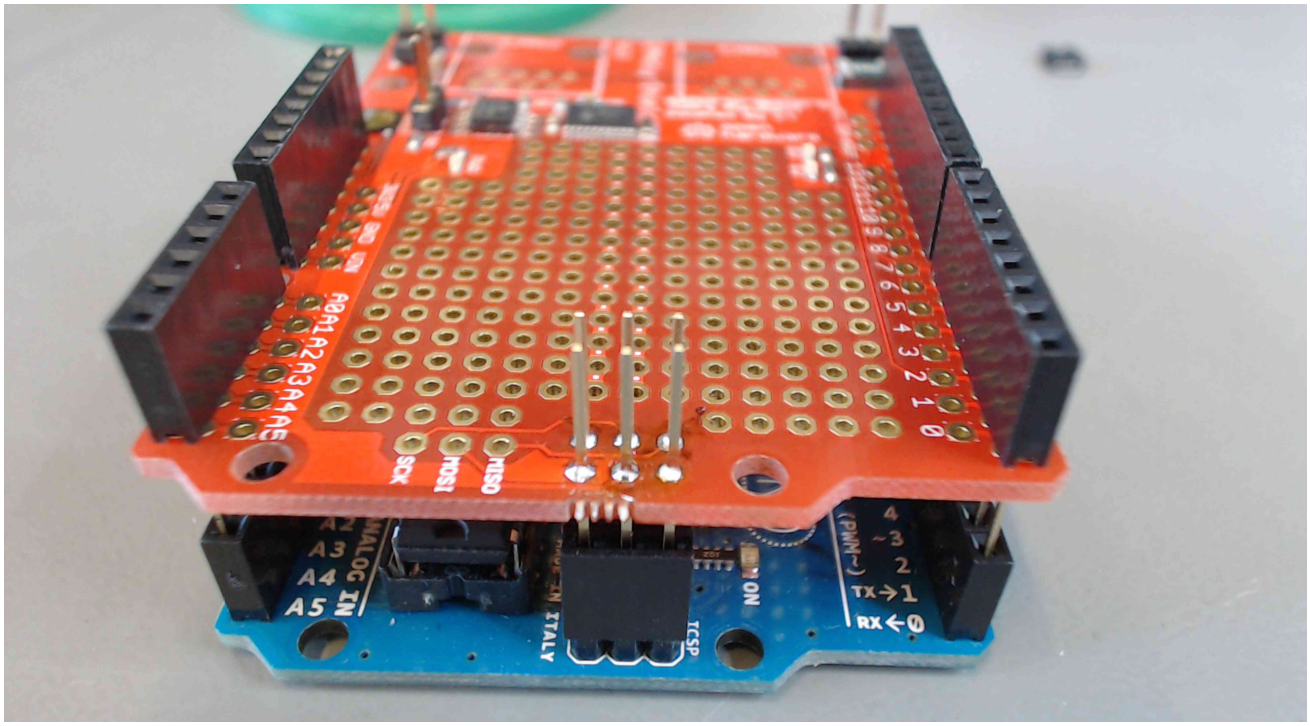
A0 A1 A2 A3 A4 A5
SCK
MISO
MOSI
A2
A3
A4
A5
ANALOG IN
ON
TCSP
ITALY
(PWM~)
4
~3
2
TX→1
RX←0