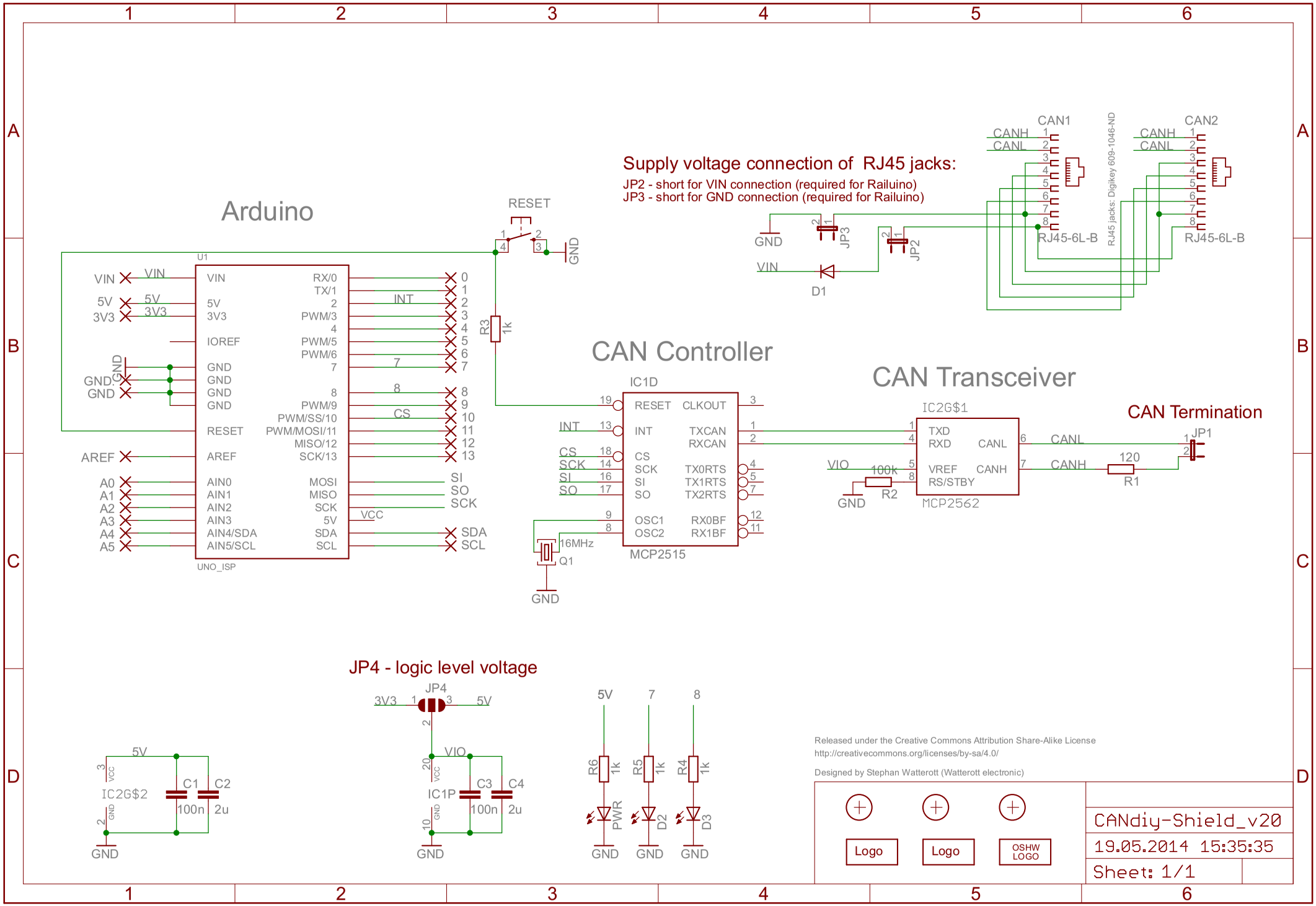
Arduino
U1
VIN
5V
3V3
IOREF
GND
RESET
AREF
A0
A1
A2
A3
A4
A5
AIN0
AIN1
AIN2
AIN3
AIN4/SDA
AIN5/SCL
RX/0
TX/1
PWM/3
PWM/5
PWM/6
PWM/9
PWM/SS/10
PWM/MOSI/11
MISO/12
SCK/13
MOSI
MISO
SCK
SDA
SCL
UNO_ISP
INT
CS
SI
SO
VCC
RESET
R3
1k
Supply voltage connection of RJ45 jacks:
JP2 - short for VIN connection (required for Railuino)
JP3 - short for GND connection (required for Railuino)
JP3
JP2
D1
CAN1
CAN2
CANH
CANL
RJ45-6L-B
RJ45 jacks: Digikey 609-1046-ND
CAN Controller
IC1D
RESET
CLKOUT
INT
TXCAN
RXCAN
CS
SCK
SI
SO
TX0RTS
TX1RTS
TX2RTS
OSC1
OSC2
RX0BF
RX1BF
MCP2515
16MHz
Q1
CAN Transceiver
IC2G$1
TXD
RXD
CANL
VREF
CANH
RS/STBY
MCP2562
VIO
100k
R2
CAN Termination
JP1
120
R1
JP4 - logic level voltage
JP4
3V3
5V
VIO
IC2G$2
C1
C2
100n
2u
IC1P
C3
C4
R6
R5
R4
PWR
D2
D3
Released under the Creative Commons Attribution Share-Alike License
http://creativecommons.org/licenses/by-sa/4.0/
Designed by Stephan Watterott (Watterott electronic)
Logo
Logo
OSHW LOGO
CANdiy-Shield_v20
19.05.2014 15:35:35
Sheet: 1/1

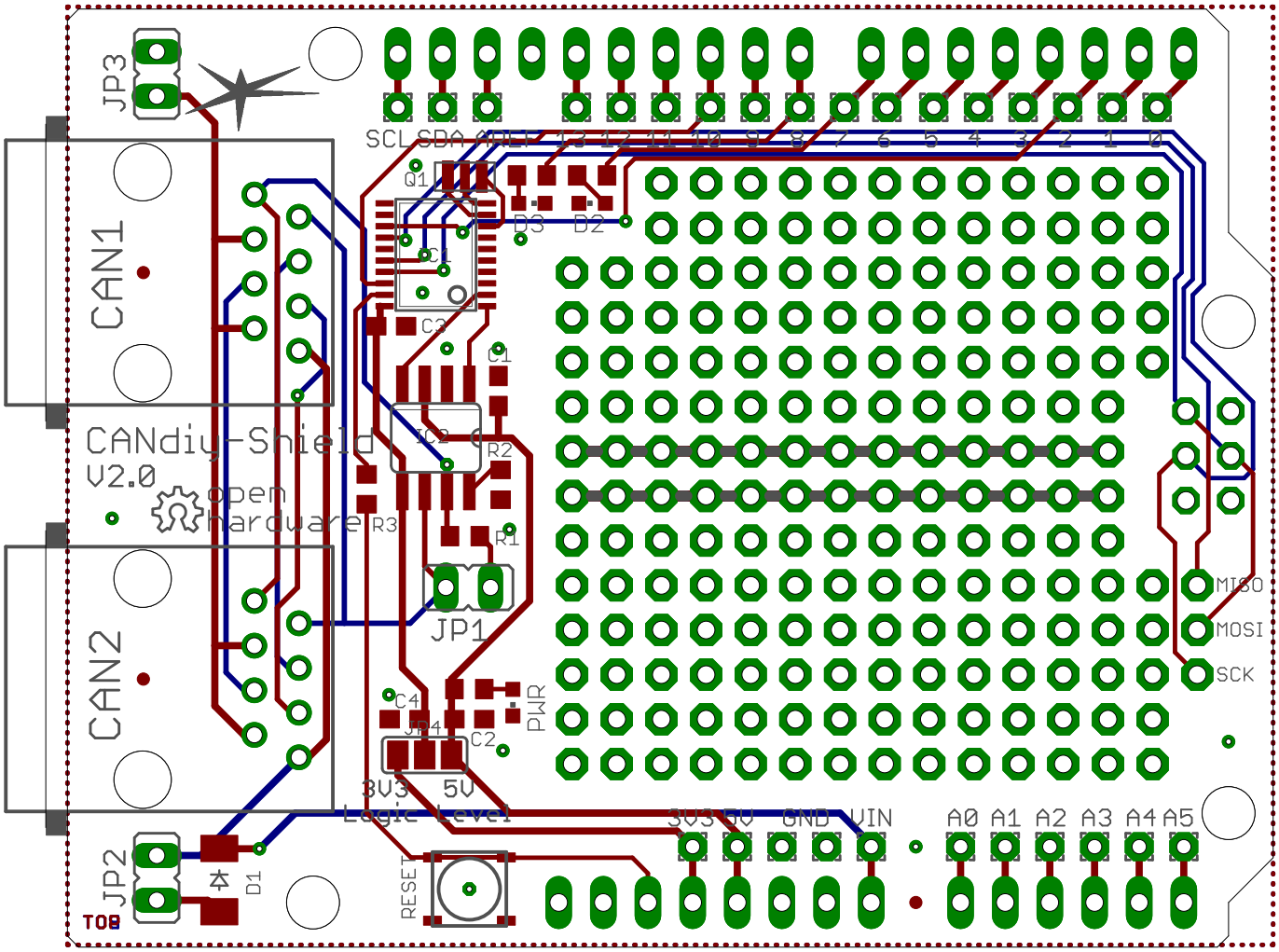
JP3
CAN1
CANdiy-Shield
V2.0
open
hardware
CAN2
JP2
TOP
D1
SCL SDA AREF 13 12 11 10 9 8 7 6 5 4 3 2 1 0
Q1
D3
D2
C1
C3
C1
X2
R2
R3
R1
JP1
C4
JP4
C2
PWR
3V3
5V
Logic level
RESET
3V3 5V GND VIN
A0 A1 A2 A3 A4 A5
MISO
MOSI
SCK

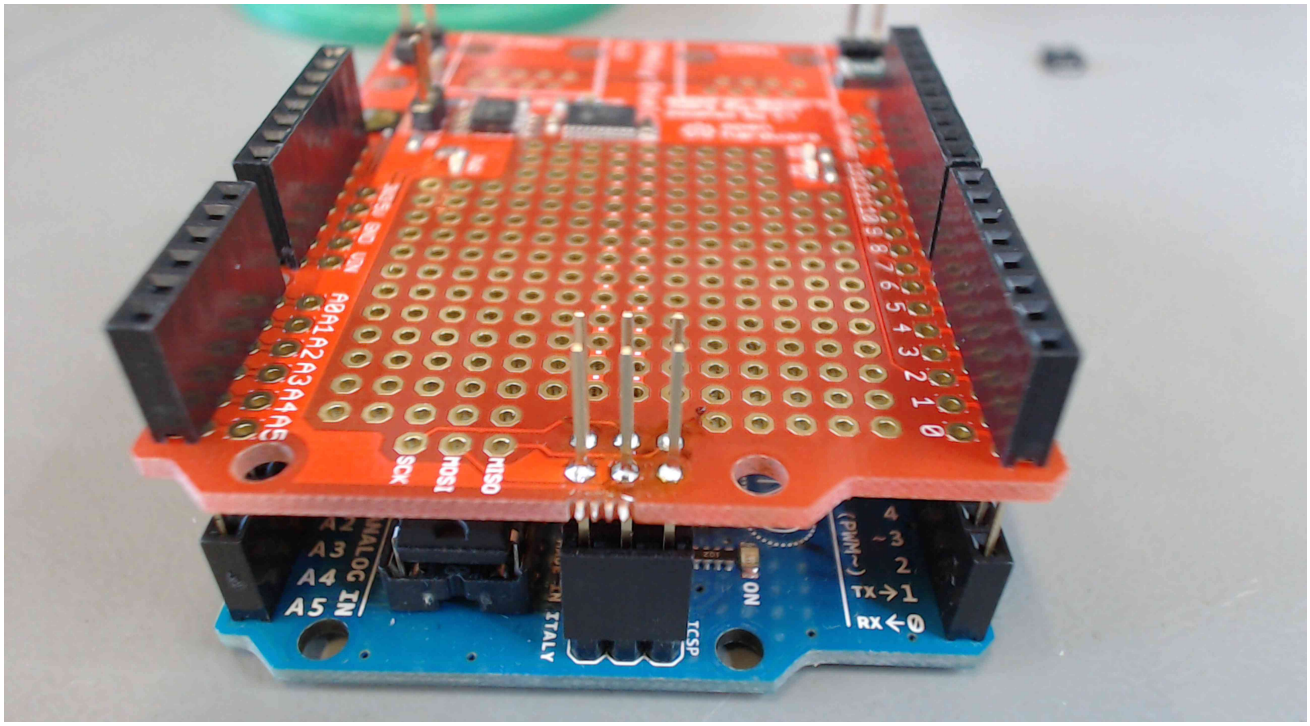
A0 A1 A2 A3 A4 A5
SCK
MISO
MOSI
A2
A3
A4
A5
ANALOG IN
ON
TCSP
ITALY
(PWM~)
4
~3
2
TX→1
RX←0