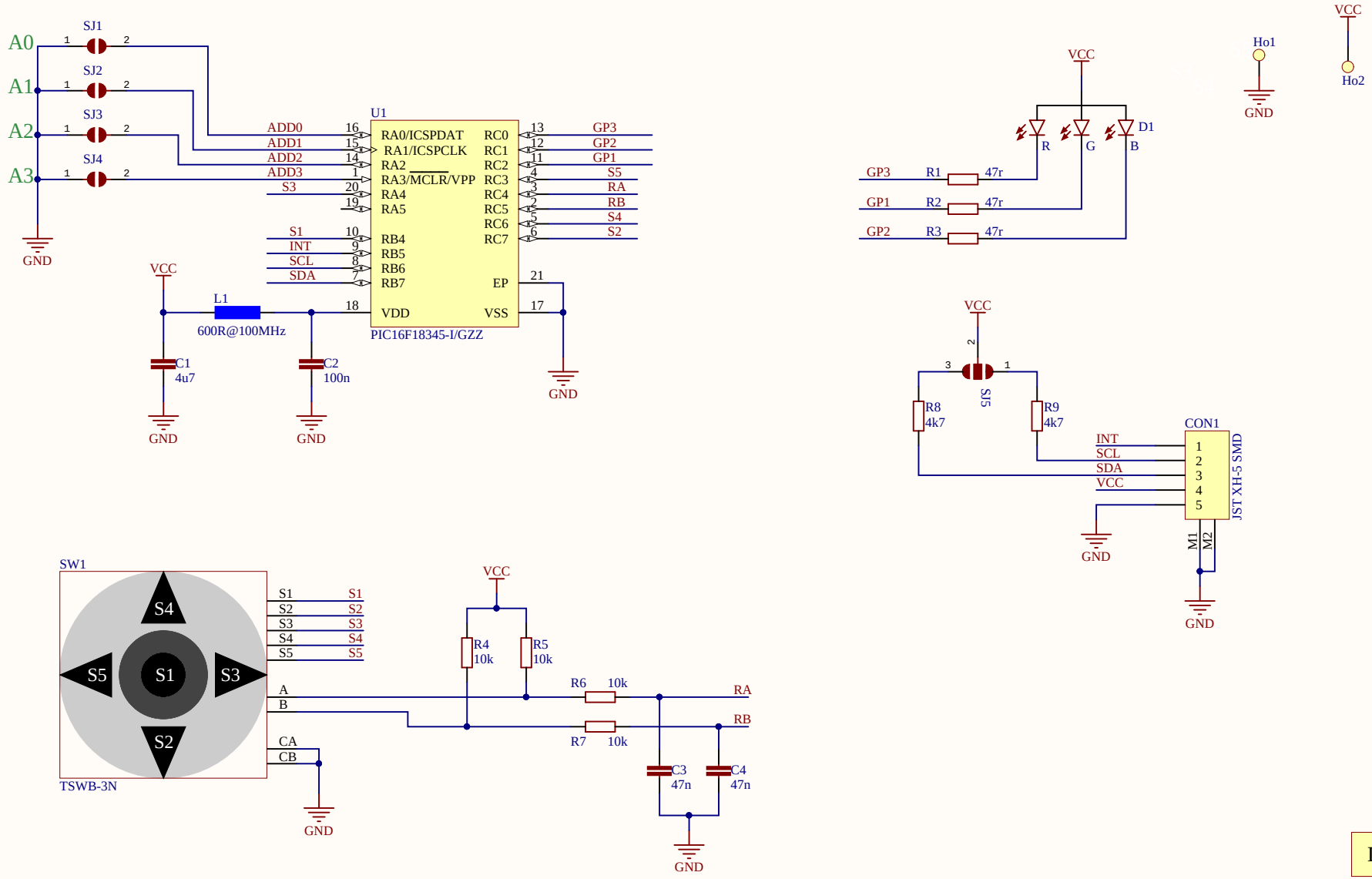


DuppaLogo

| | | |
|---|---|---|
| Title *I2CNavKey* | | Author: S. Caron |
| Size: A4 | Revision: 1.1 | CheckedBy: S. Caron |
| Date: 02/01/2019 | Sheet 1 of 1 | ApprovedBy: S. Caron |

DuPPa

GND
VCC
R4
C4
R7
R1
R3
R2
C1
L1
C2
U1
SJ5
A0
A1
A2
A3
R6
C3
R5
R9
R8
INT
SCL
SDA
- +
I2CNavKey

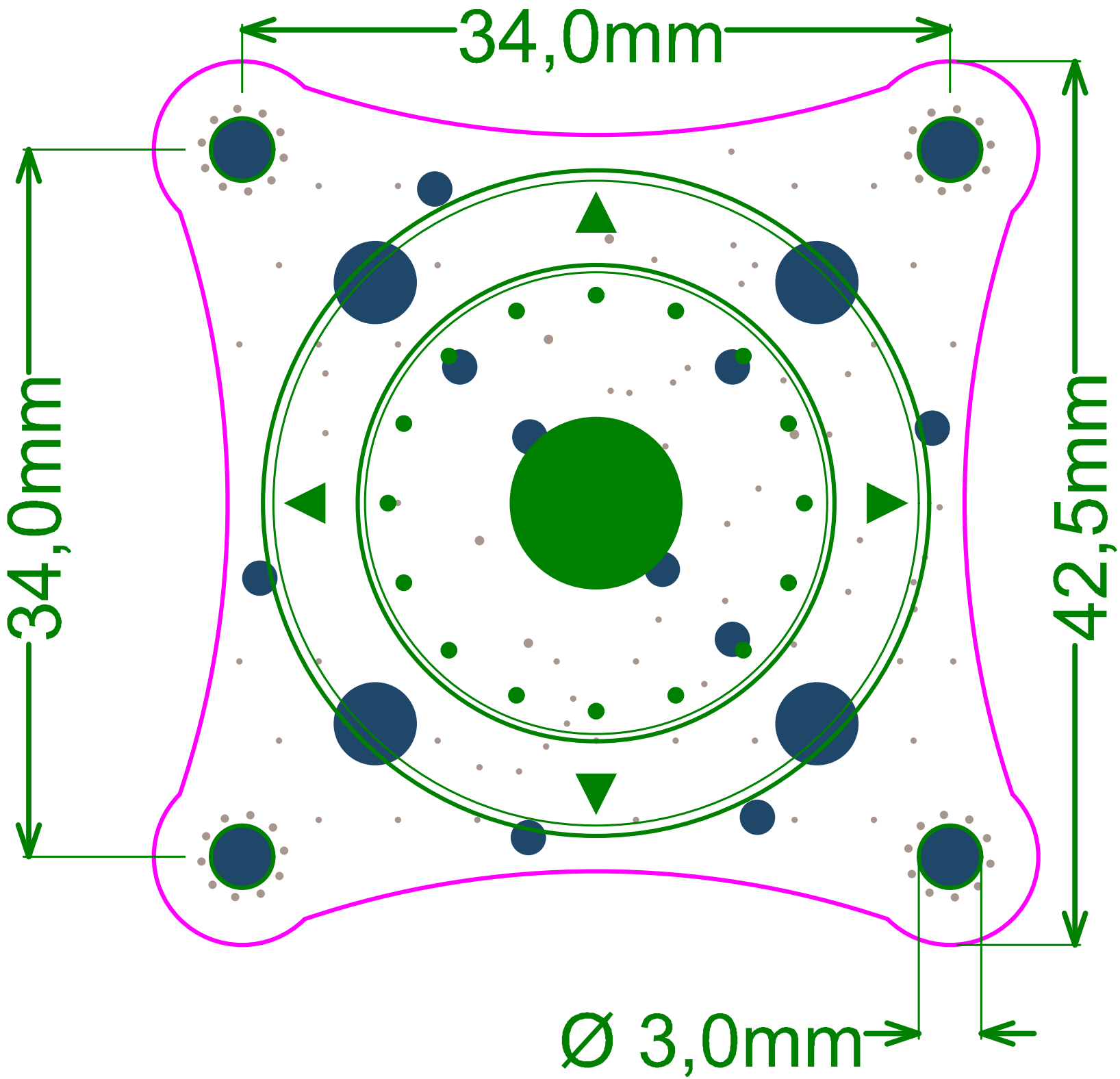
34,0mm
34,0mm
42,5mm
Ø 3,0mm