NORTH SOUTH UNIVERSITY

DEPARTMENT OF ELECTRICAL & COMPUTER ENGINEERING

LAB REPORT

Summer 2021

COURSE NAME: Analog Electronics Lab

COURSE CODE: EEE/ETE 111 L

SECTION: 09

COURSE INSTRUCTOR: Tasmina Imam

EXPERIMENT NO: 05

EXPERIMENT NAME:

Zener Diode applications.

EXPERIMENT DATE: 28th July 2021

DATE OF SUBMISSION: 3 August 2021

GROUP NUMBER: 07

SUBMITTED TO: Tasmina Imam

SUBMITTED BY	STUDENT ID	SCORE
1.Mohammad Iftekhar Bin Ashraf	2013199645	
2. Nuzhath Tabassum Orpaa	1931052042	
3. Ahanaf Tahomid	1831920642	
4. Md. Mehraj Hossain Sani (writer)	2013623043	
5. Md Kamran Ahmed	2012356643	

Objectives:

- Study of the Zener Diode applications.

Theory:

A Zener diode is a heavily doped semiconductor diode which is designed to operate in reverse direction or in the breakdown region. So, we can say that, it's a specially designed diode that can optimize in the breakdown region. The Ordinary diodes we have studied before do not operate in the breakdown region because this may damage them. But in this case Zener diode operates in the breakdown region. The Zener diode behaves just like a normal general-purpose diode consisting of a silicon PN junction and when biased in the forward direction, that is Anode positive with respect to its Cathode, it behaves just like a normal signal diode passing the rated current.

However, unlike a conventional diode that blocks any flow of current through itself when reverse biased, that is the Cathode becomes more positive than the Anode, as soon as the reverse voltage reaches a pre-determined value, the Zener diode begins to conduct in the reverse direction The symbol of Zener diode shows in figure 5.1.

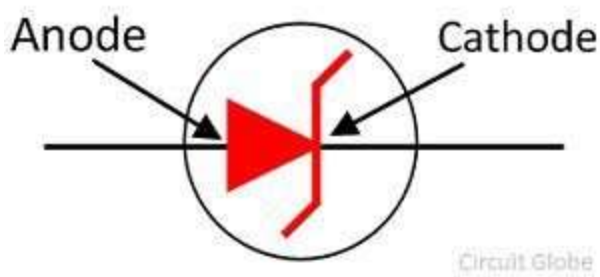

Figure 5.1: Symbol of Zener Diode.[i]

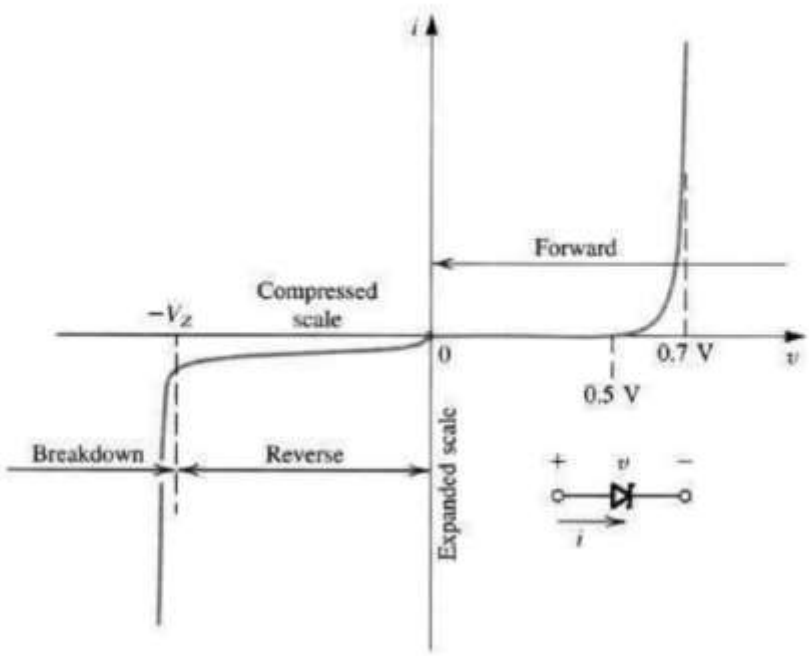

Figure 5.2: I - V Characteristics of Zener Diode.

The Zener diode may have a breakdown voltage from about 2 to 200 volts. These diodes can operate in any of three regions – forward, leakage and breakdown. Figure 5.2 shows the I-V characteristics curve of Zener diode.[ii]

- The first quadrant is the forward biased region. In this region, the Zener diode works like an ordinary diode. When a forward voltage is applied, current flows through it.
- In the leakage region (between zero and breakdown) it has only a small reverse saturation current.
- In the breakdown it has a sharp knee, followed by an almost vertical increase in current without changing the voltage. Once the reverse bias voltage becomes more than the Zener breakdown voltage, a significant amount of current starts flowing through the diode due to Zener breakdown. The voltage remains at the Zener breakdown voltage value.
- The voltage is almost constant, approximately equal to Vz over most of the breakdown region.

Equivalent circuits of Zener diode: Two approximations are used for Zener Diode equivalent circuit.
First Approximation: As the voltage remains constant across the Zener diode though the current changes through it, it is considered as a constant voltage source according to the first approximation.
Second Approximation: A Zener resistance is in series with the ideal voltage source is approximated.

Equipment and Components:

Serial no.	Component Details	Specification	Quantity
1.	Zener diode	5 volts	1 piece
2.	Resistor	220Ω, 470Ω, 1kΩ	1 piece each
3.	POT	10 kΩ	1 piece
4.	Trainer Board		1 unit
5.	DC Power Supply		1 unit
6.	Digital Multimeter		1 unit
7.	Chords and wire		as required

Experimental Setup:

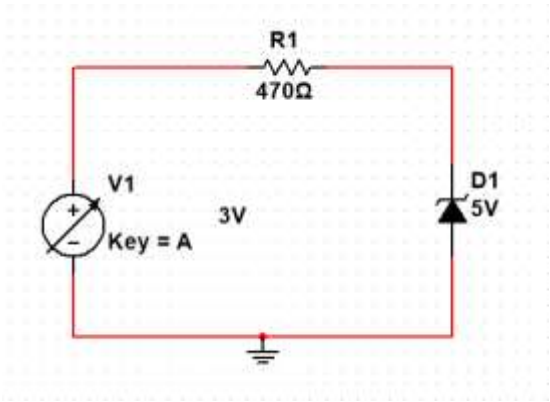

Figure: 5.3- Revere Biased Zener

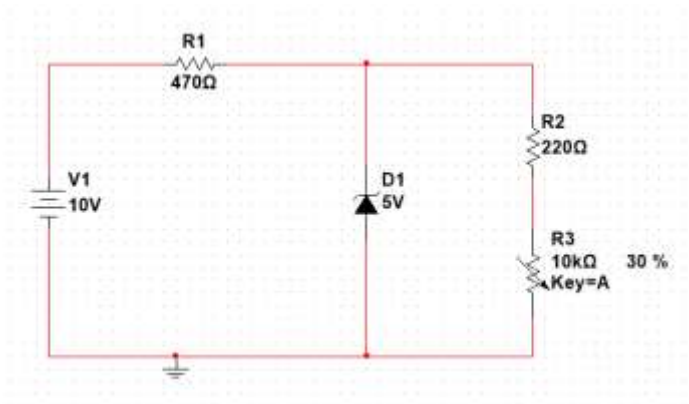

Figure 5.4: Load Regulations

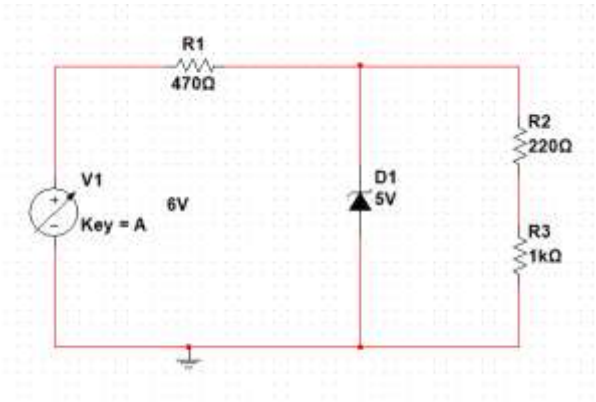

Figure 5.5: Line Regulations

Data and Table:

Theoretical	Practical
470Ω	470Ω
220Ω	220Ω
1KΩ	1KΩ

Table 5.1: Data for I - V characteristics

V (volts)	V_R (volts)	Vz (volts)	$I_Z = V_R / R$ (mA)
0.1	9.447 uV	99.991 mV	20.101 nA=2.0101e^-5mA
0.3	28.339 uV	299.972 mV	60.296 nA=6.0296e^-5mA
0.5	47.231 uV	499.953 mV	100.492 nA=0.000100492mA
0.7	66.128 uV	699.934 mV	140.687 nA=0.000140687mA
1.0	94.462 uV	999.906 mV	200.984 nA=0.000200984mA
2.0	188.924 uV	2V	401.967 nA=0.000401967mA
3.0	283.405 uV	3V	602.94 nA=0.00060294mA
4.0	377.873 uV	4 V	803.935 nA=0.000803935mA
5.0	92.521 mV	4.9 V	196.853 uA=0.196853mA
6.0	1.044 V	4.956 V	2.221 mA
7.0	2.031 V	4.969 V	4.321 mA
8.0	3.023 V	4.977 V	6.431 mA
9.0	4.017V	4.983 V	8.547 mA
10.0	5.013 V	4.987 V	10.665 mA

Table 5.2: Data for Load Regulation

POT_R (k ohm)	V_{220} (mV)	V_L (volts)	I_L (Amp)= V220/220
500 Ω	1.518 V	4.967 V	6.898 mA
1 kΩ	897.643 mV	4.978 V	4.08 mA
5 kΩ	210.119 mV	4.986 V	955.092 uA=0.955092 mA
9 kΩ	118.981 mV	4.986 V	540.828 uA=0.540828 mA
10 kΩ	107.341 mV	4.986 V	487.92 uA=0.48792 mA

Table 5.3: Data for Line Regulation.

V (volts)	V_L (volts)
1.0	721.844mV =0.721844V
3.0	2.166 V
6.0	4.331 V
8.0	4.958 V
9.0	4.97 V
10.0	4.978 V
11.0	4.983 V
12.0	4.988 V

Graph:

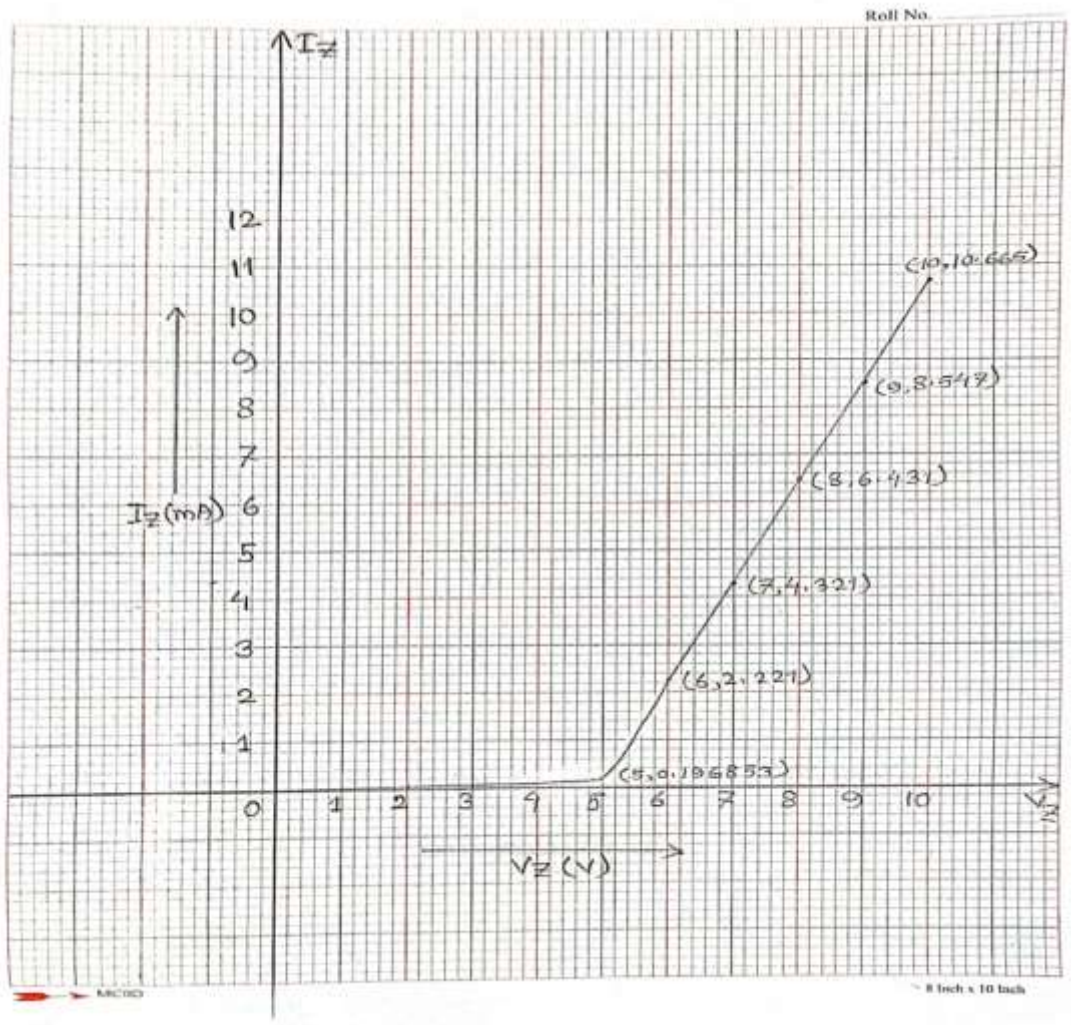

Graph 5.1: I-V characteristics of Zener diode

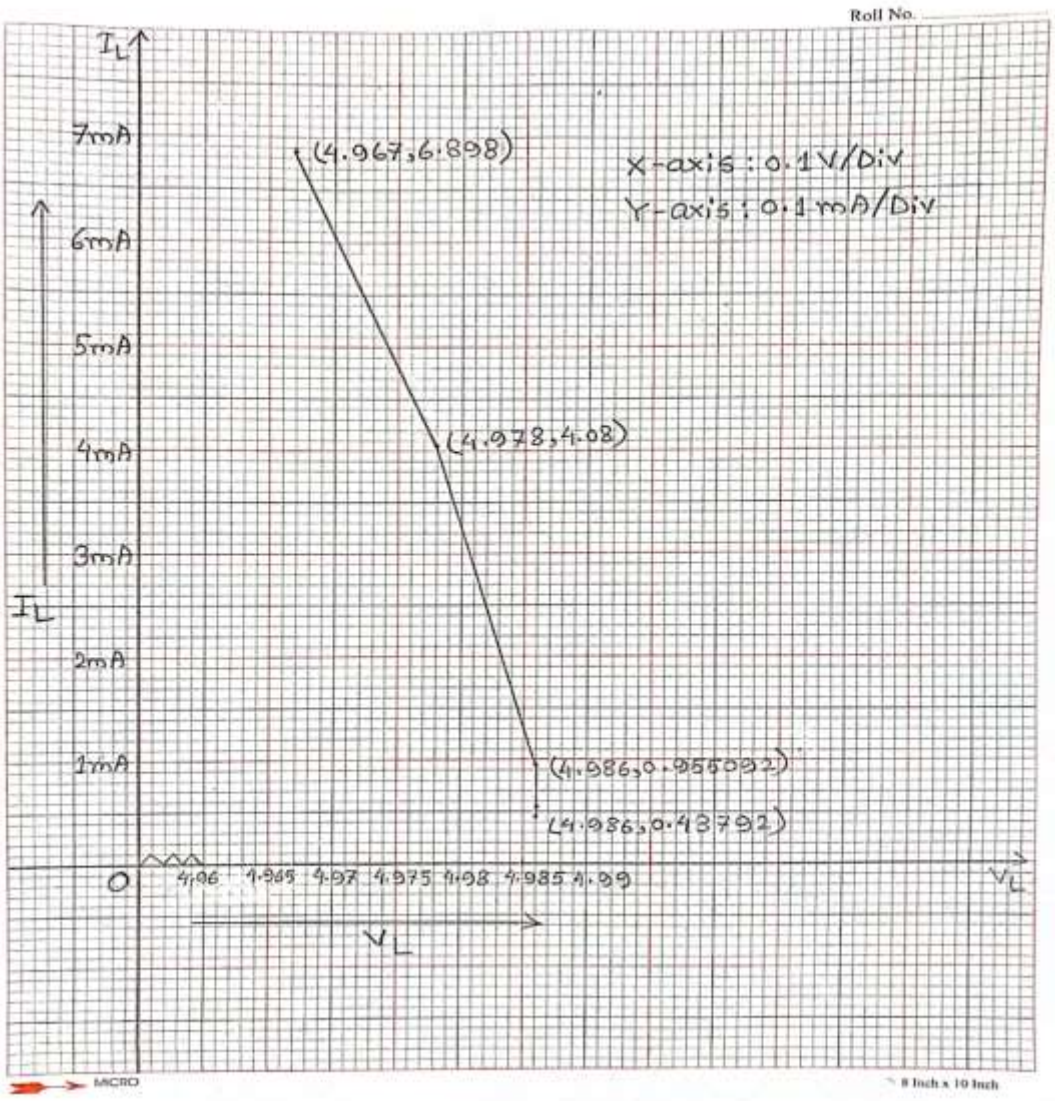

Graph 5.2: IL vs V graph

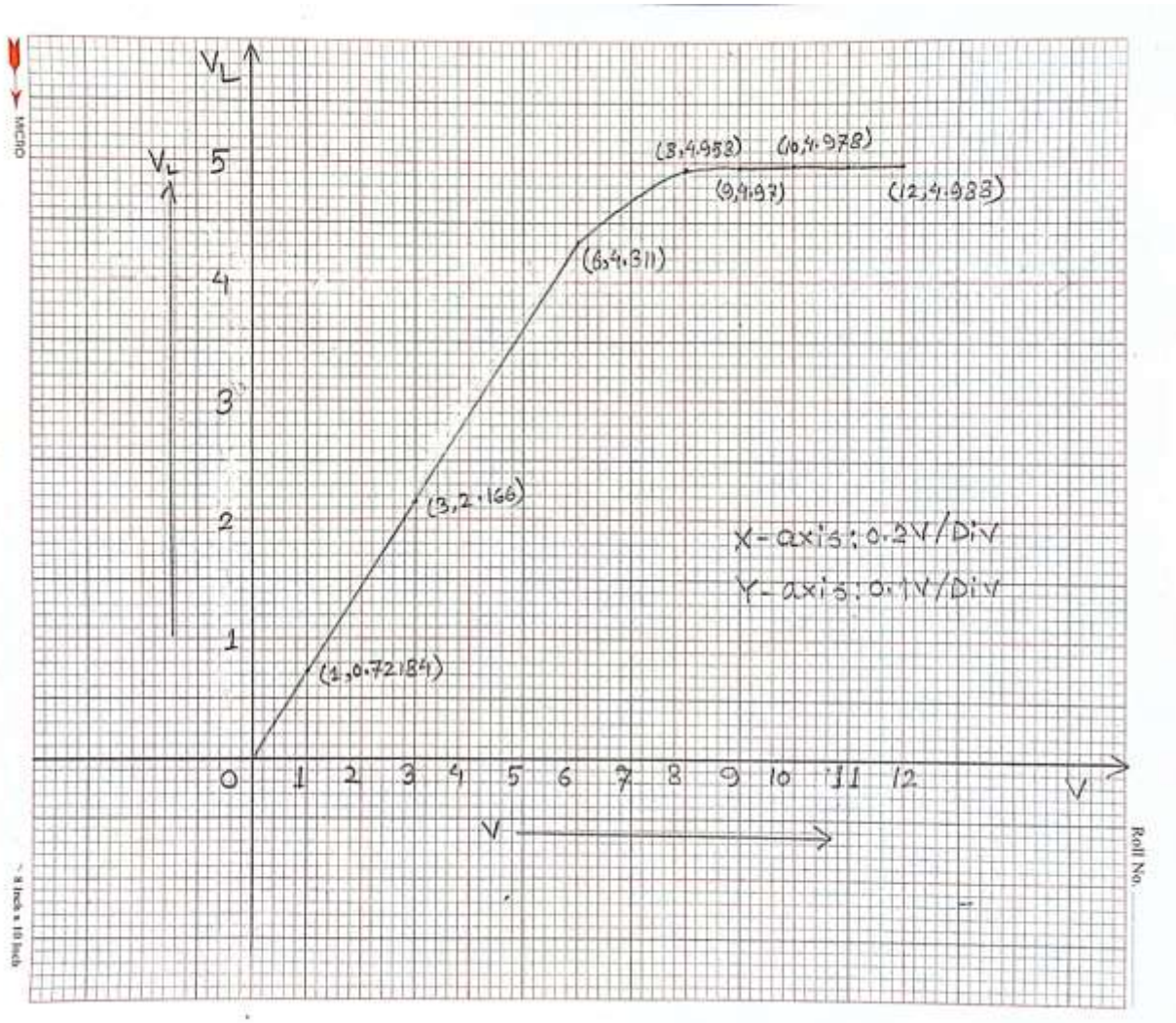

Graph 5.3: VL vs V graph

Result analysis and Discussion:

In this experiment, we were introduced to key concepts like Zener diodes, breakdown voltages and their applications in a circuit. All the required simulations were performed using multisim and the results were verified from the theory section of the lab manual. We experimented with Zener diodes three ways namely- reverse biased Zener, load regulations and line regulations. The three sets of readings were then used to corroborate Zener diodes functioning on breakdown regions. For table 5.1, we created a simple circuit with three components only. We then changed the values of DC supply voltage periodically. The value of voltage across Zener and resistor were recorded. The V_z values in all cases were less than 5V. In 5.2, we took a steady DC voltage and a load comprising of resistor and a varied resistor. We varied the resistance value and still found the V z values never touched 5V. For table 5.3, we constructed a similar circuit as part 2

but swapped the power supply with a variable DC supply. The V_L values continued to fluctuate between 4.945V to 4.993V. Our experiment confirmed that Zener diodes can run efficiently even on breakdown regions.

Question/Answer:

1. Plot I-V characteristics of Zener diode. Determine the Zener breakdown voltage from the plot.

Answer:

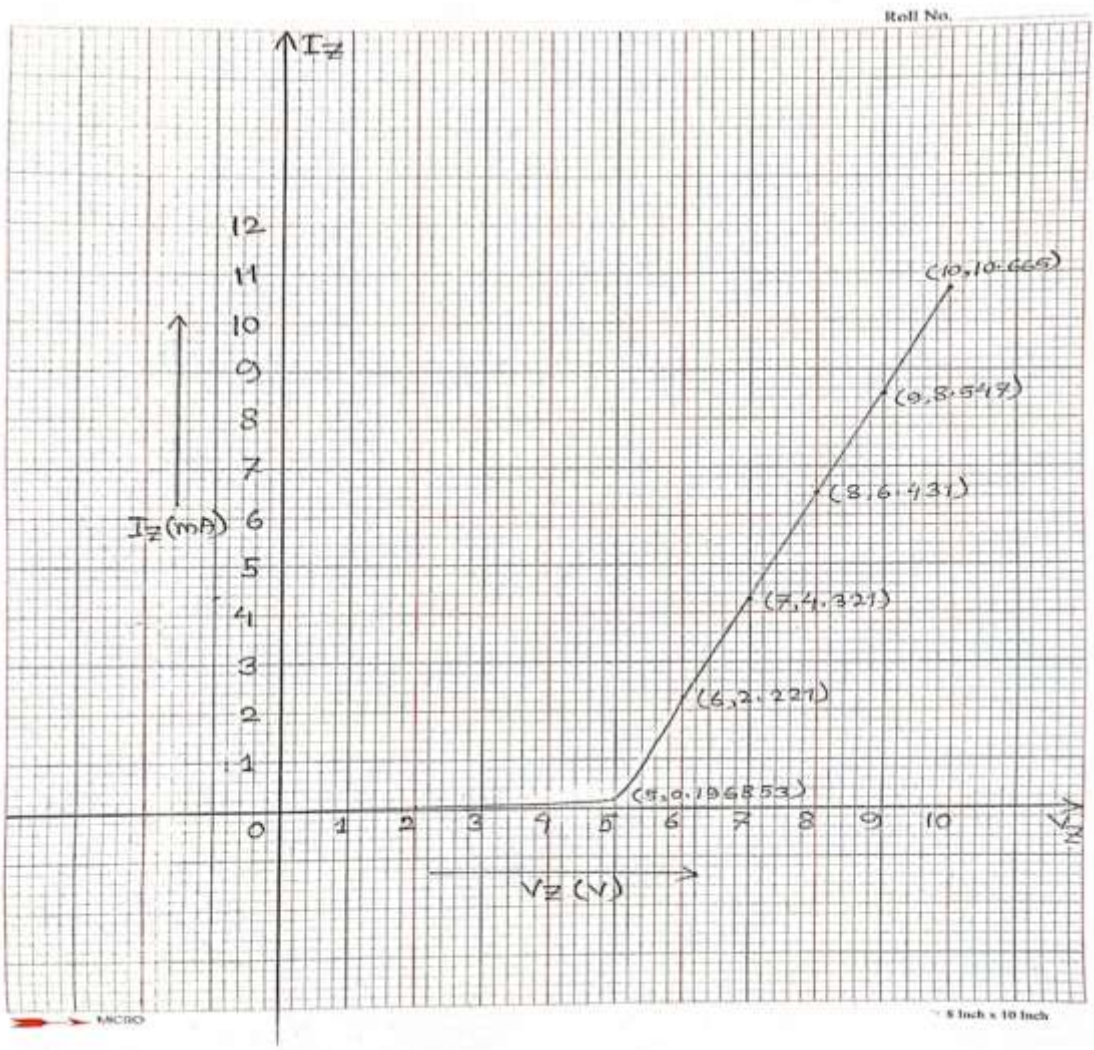

Graph: I-V characteristics of Zener diode

From the plot the Zener breakdown voltage is 5V.

2. Plot IL vs VL for the data table 4.2. Scale [x-axis: 0.1V/DIV, y-axis: any suitable range].

Find the Load regulation from the graph.

Answer:

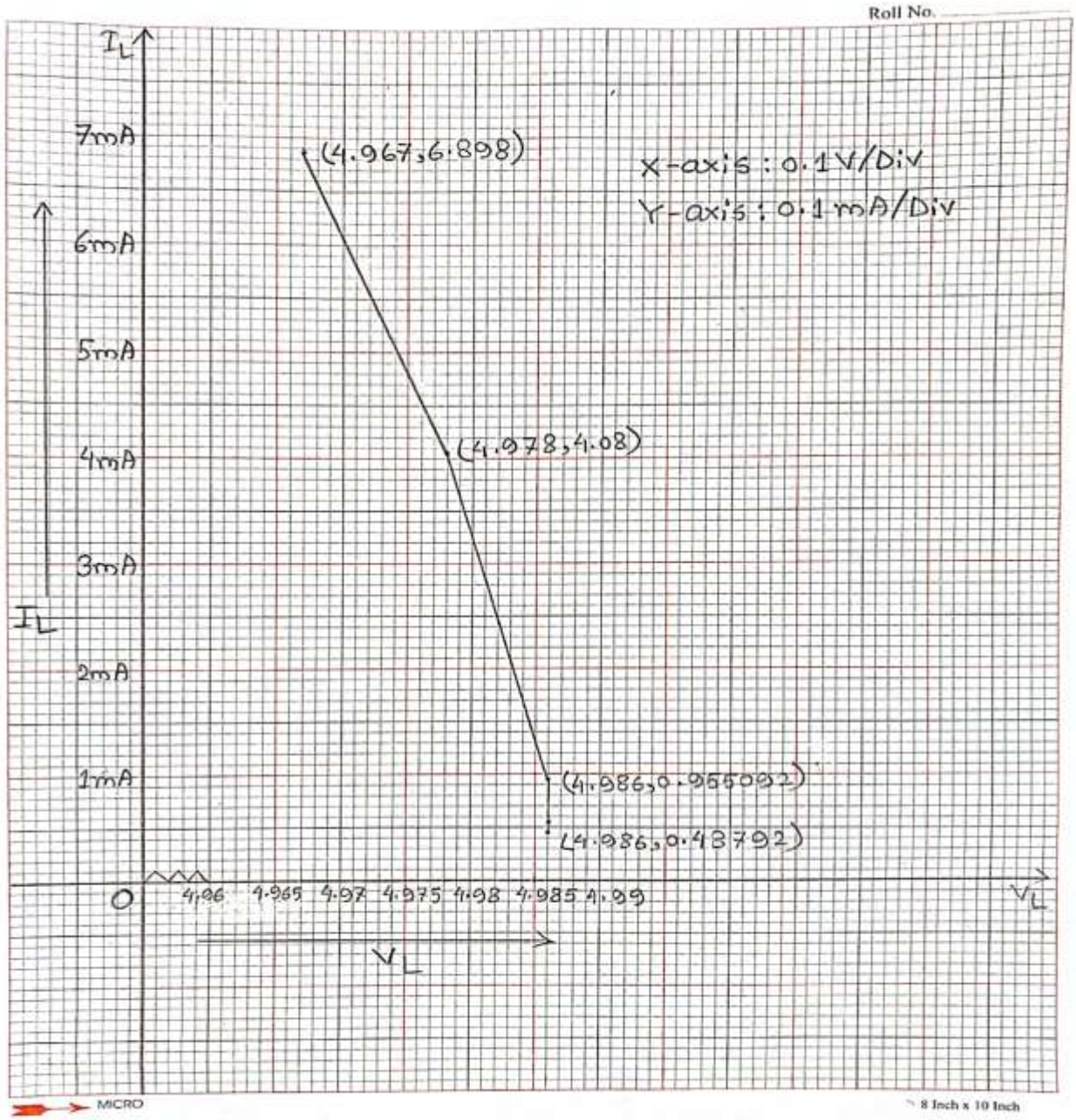

From the graph and table 4.2 the load regulation is 0.48792 mA to 0.955092 mA because in this region the load voltage is constant.

3. Plot VL vs V for the data table 4.3. Find the line regulation from graph.

Answer:

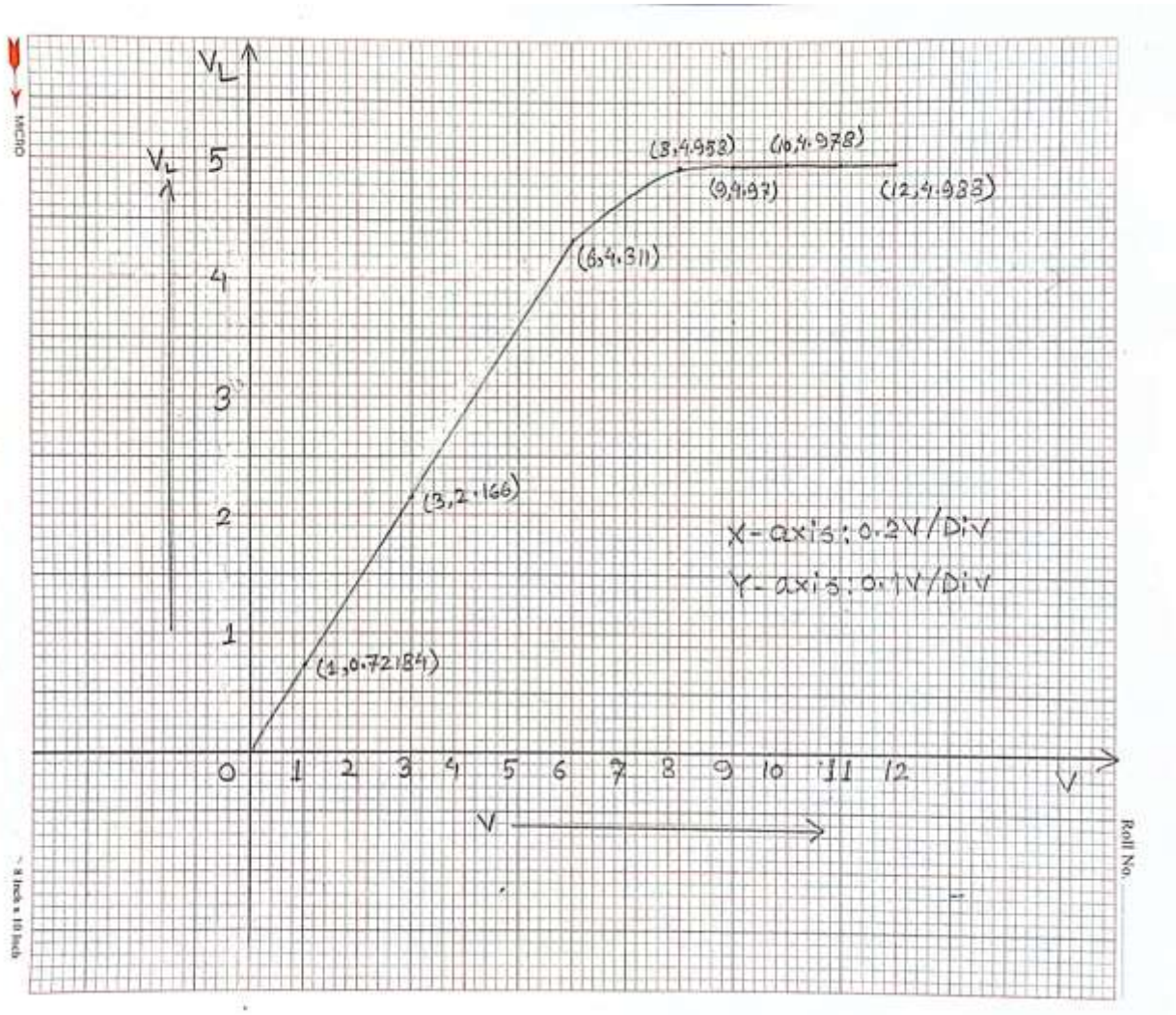

From the graph the line regulation is 8V to 12V because in this region the load voltages are almost constant.

Attachment: Class Assignment.

Table 5.1: Data for I - V characteristics

V (volts)	V_R (volts)	Vz (volts)	$I_Z = V_R / R$ (mA)
0.1	9.447 uV	99.991 mV	20.101 nA
0.3	28.339 uV	299.972 mV	60.296 nA
0.5	47.231 uV	499.953 mV	100.492 nA
0.7	66.128 uV	699.934 mV	140.687 nA
1.0	94.462 uV	999.906 mV	200.984 nA
2.0	188.924 uV	2V	401.967 nA
3.0	283.405 uV	3V	602.94 nA
4.0	377.873 uV	4 V	803.935 nA
5.0	92.521 mV	4.9 V	196.853 uA
6.0	1.044 V	4.956 V	2.221 mA
7.0	2.031 V	4.969 V	4.321 mA
8.0	3.023 V	4.977 V	6.431 mA
9.0	4.017V	4.983 V	8.547 mA
10.0	5.013 V	4.987 V	10.665 mA

Table 5.2: Data for Load Regulation

POT_R (k ohm)	V_{220} (mV)	V_L (volts)	I_L (Amp)= V220/220
500 Ω	1.518 V	4.967 V	6.898 mA
1 kΩ	897.643 mV	4.978 V	4.08 mA
5 kΩ	210.119 mV	4.986 V	955.092 uA
9 kΩ	118.981 mV	4.986 V	540.828 uA
10 kΩ	107.341 mV	4.986 V	487.92 uA

Table 5.3: Data for Line Regulation.

V (volts)	V_L (volts)
1.0	721.844 mV
3.0	2.166 V

6.0	4.331 V
8.0	4.958 V
9.0	4.97 V
10.0	4.978 V
11.0	4.983 V
12.0	4.988 V

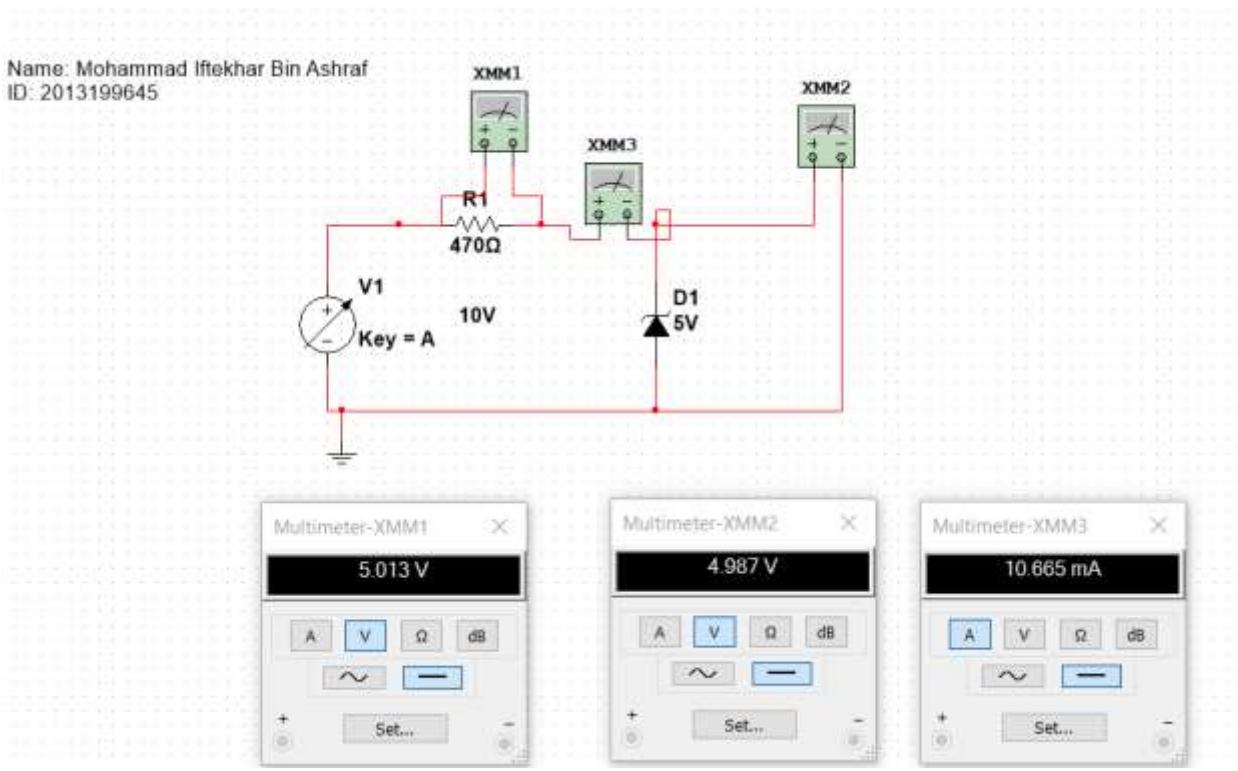

Figure 5.3: Reverse Biased Zener

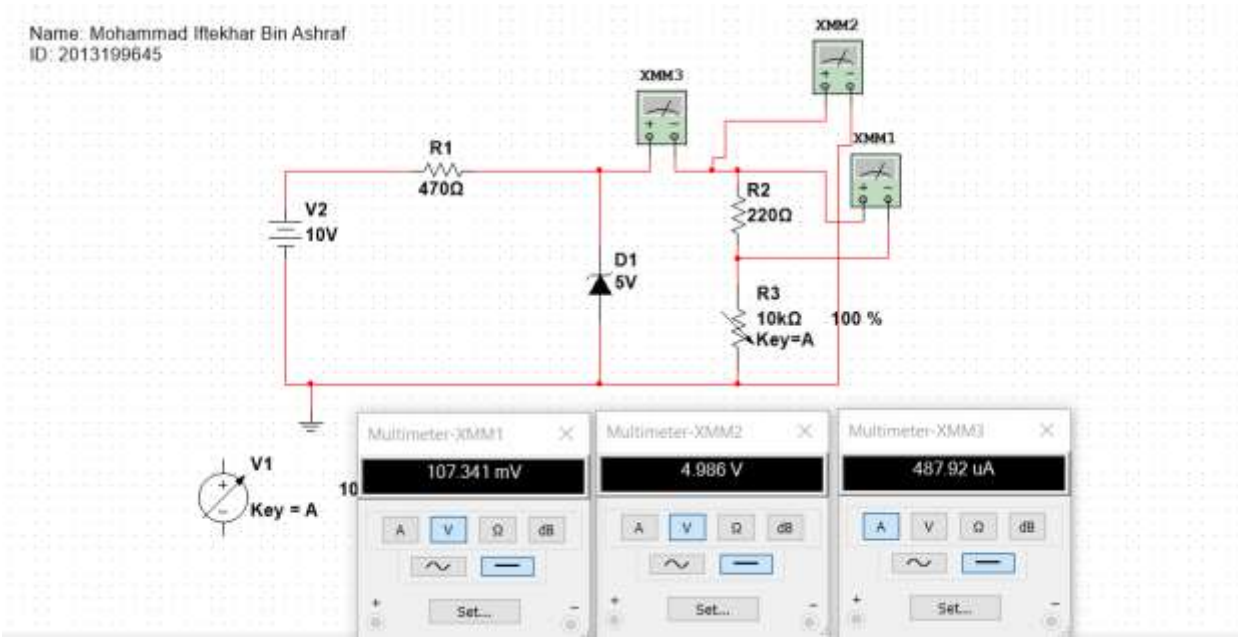

Figure 5.4: Load Regulations.

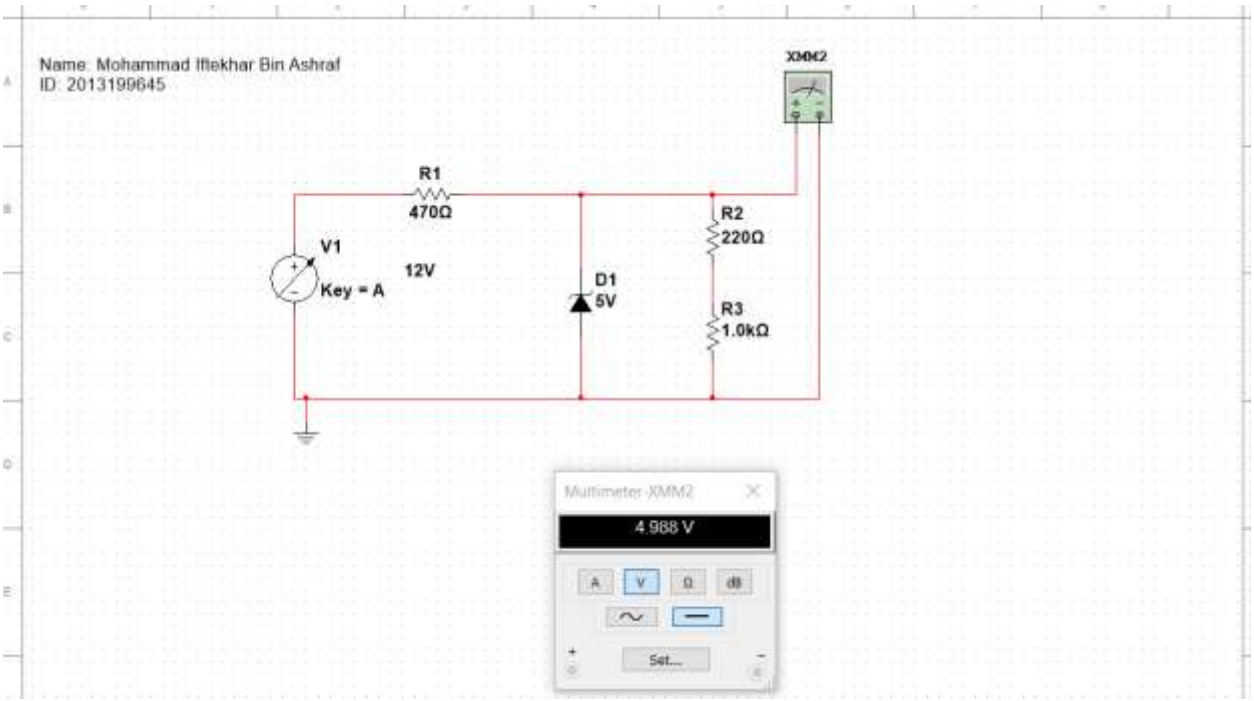

Figure 5.5: Line Regulations

[i] https://circuitglobe.com/zener-diode.html
[ii] https://www.electrical4u.com/characteristics-of-zener-diode/