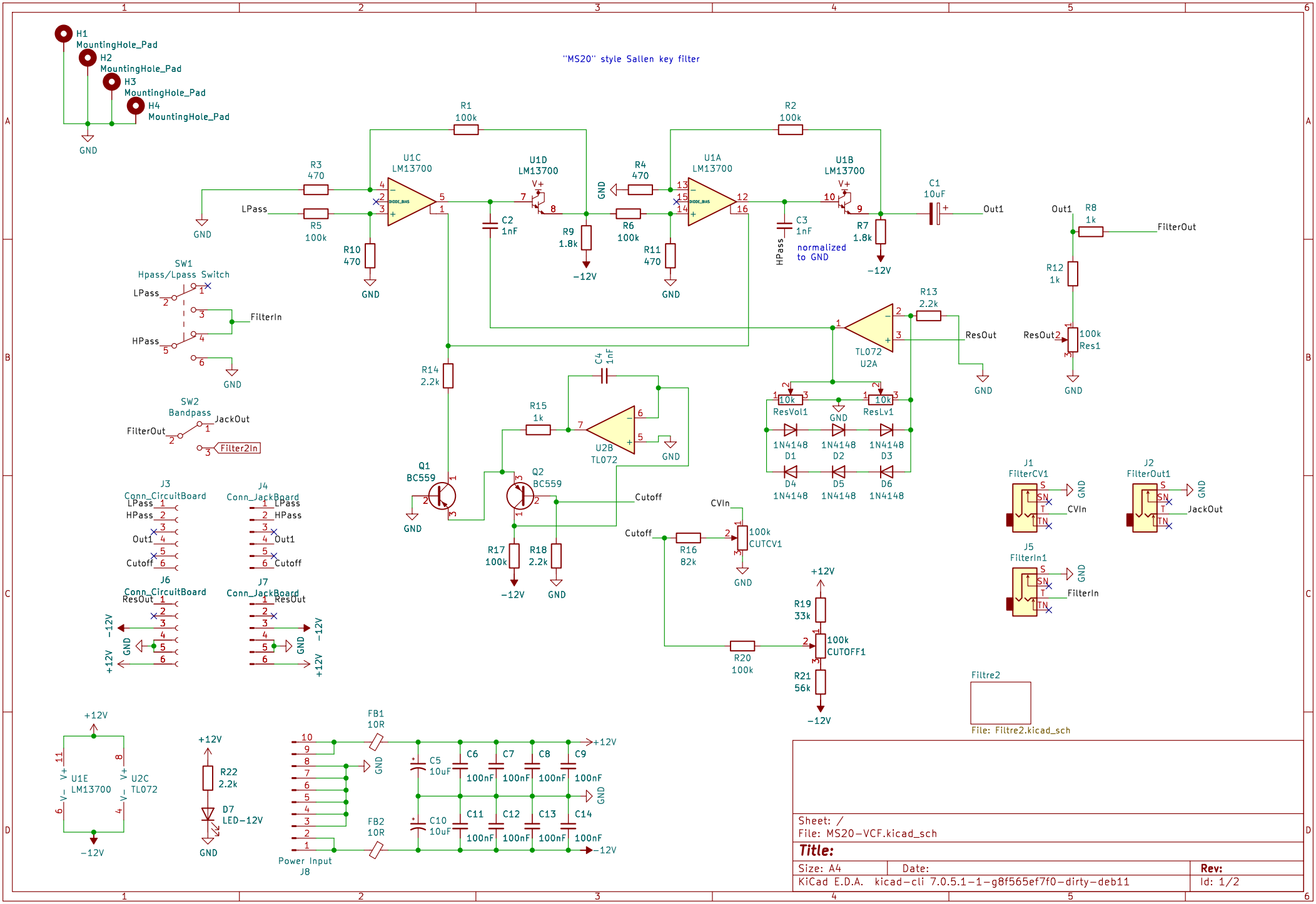

Sheet: /
File: MS20-VCF.kicad_sch

Title:

Size: A4	Date:	Rev:
KiCad E.D.A. kicad-cli 7.0.5.1-1-g8f565ef7f0-dirty-deb11		Id: 1/2

"MS20" style Sallen key filter

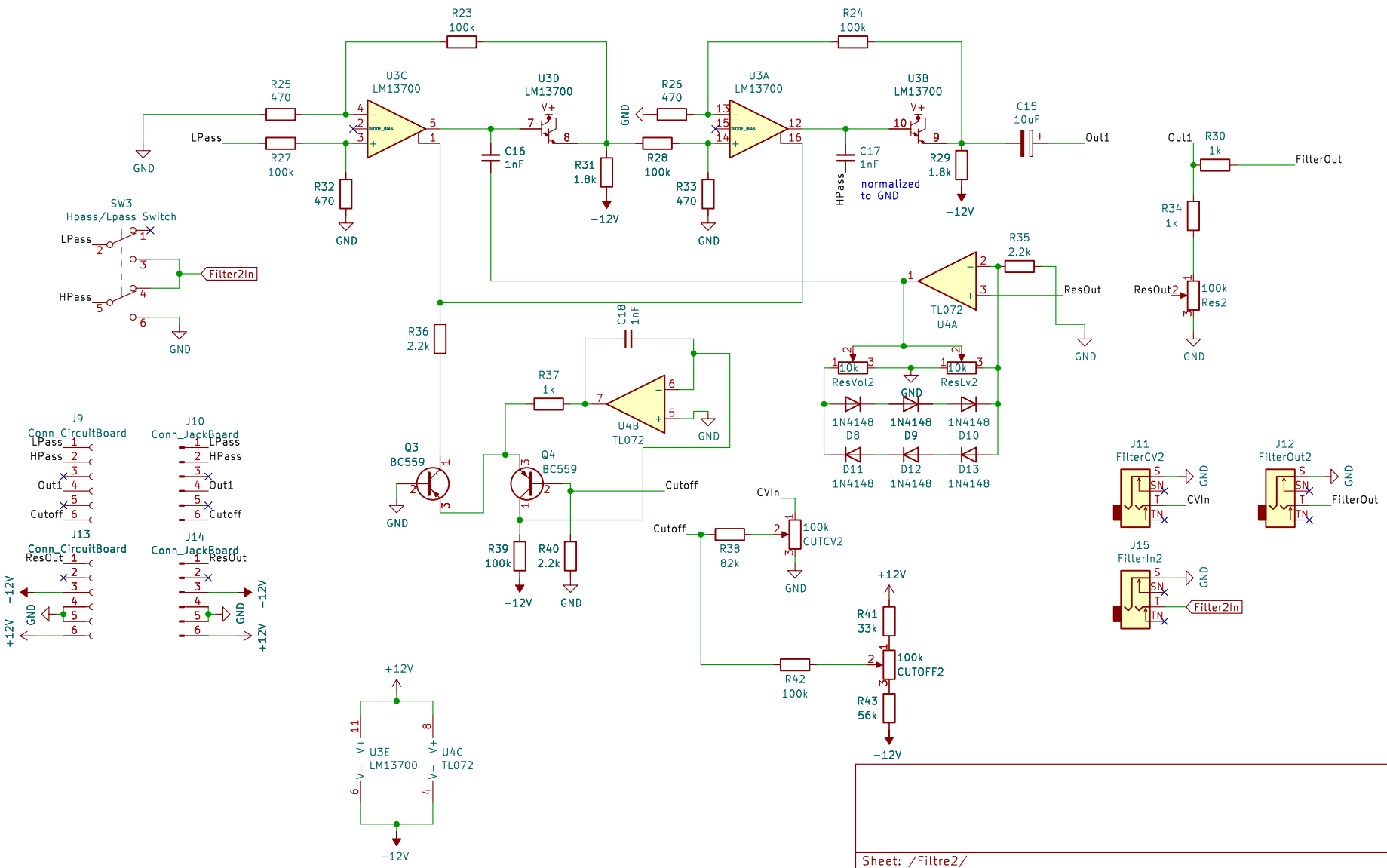

Sheet: /Filtre2/
File: Filtre2.kicad_sch

Title:

Size: A4	Date:	Rev:
KiCad E.D.A. kicad-cli 7.0.5.1-1-g8f565ef7f0-dirty-deb11		Id: 2/2