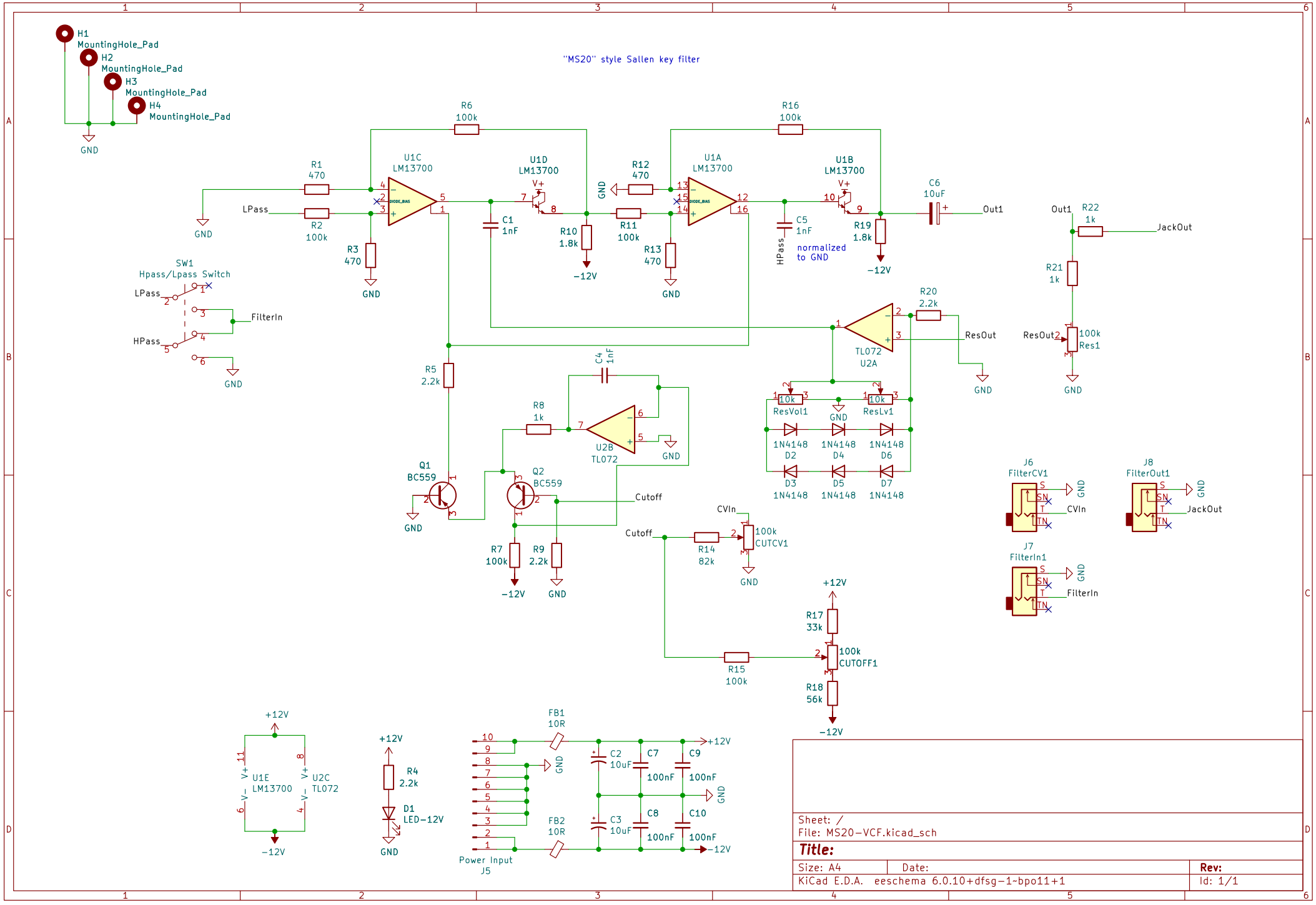
"MS20" style Sallen key filter
H1 MountingHole_Pad
H2 MountingHole_Pad
H3 MountingHole_Pad
H4 MountingHole_Pad
GND
R6 100k
R16 100k
R1 470
R2 100k
R3 470
U1C LM13700
U1D LM13700
U1A LM13700
U1B LM13700
R12 470
R11 100k
R13 470
R10 1.8k
R19 1.8k
C1 1nF
C5 1nF
C6 10uF
Out1
LPass
HPass
normalized to GND
-12V
SW1 Hpass/Lpass Switch
FilterIn
R5 2.2k
C4 1nF
R8 1k
U2B TL072
Q1 BC559
Q2 BC559
Cutoff
R7 100k
R9 2.2k
R20 2.2k
TL072 U2A
ResOut
R22 1k
JackOut
R21 1k
ResOut2
100k Res1
10k ResVol1
10k ResLv1
1N4148 D2
1N4148 D4
1N4148 D6
1N4148 D3
1N4148 D5
1N4148 D7
J6 FilterCV1
J8 FilterOut1
J7 FilterIn1
CVIn
R14 82k
100k CUTCV1
+12V
R17 33k
100k CUTOFF1
R18 56k
R15 100k
U1E LM13700
U2C TL072
R4 2.2k
D1 LED-12V
FB1 10R
FB2 10R
C2 10uF
C3 10uF
C7 100nF
C8 100nF
C9 100nF
C10 100nF
Power Input J5
Sheet: /
File: MS20-VCF.kicad_sch
Title:
Size: A4
Date:
Rev:
KiCad E.D.A. eeschema 6.0.10+dfsg-1~bpo11+1
Id: 1/1