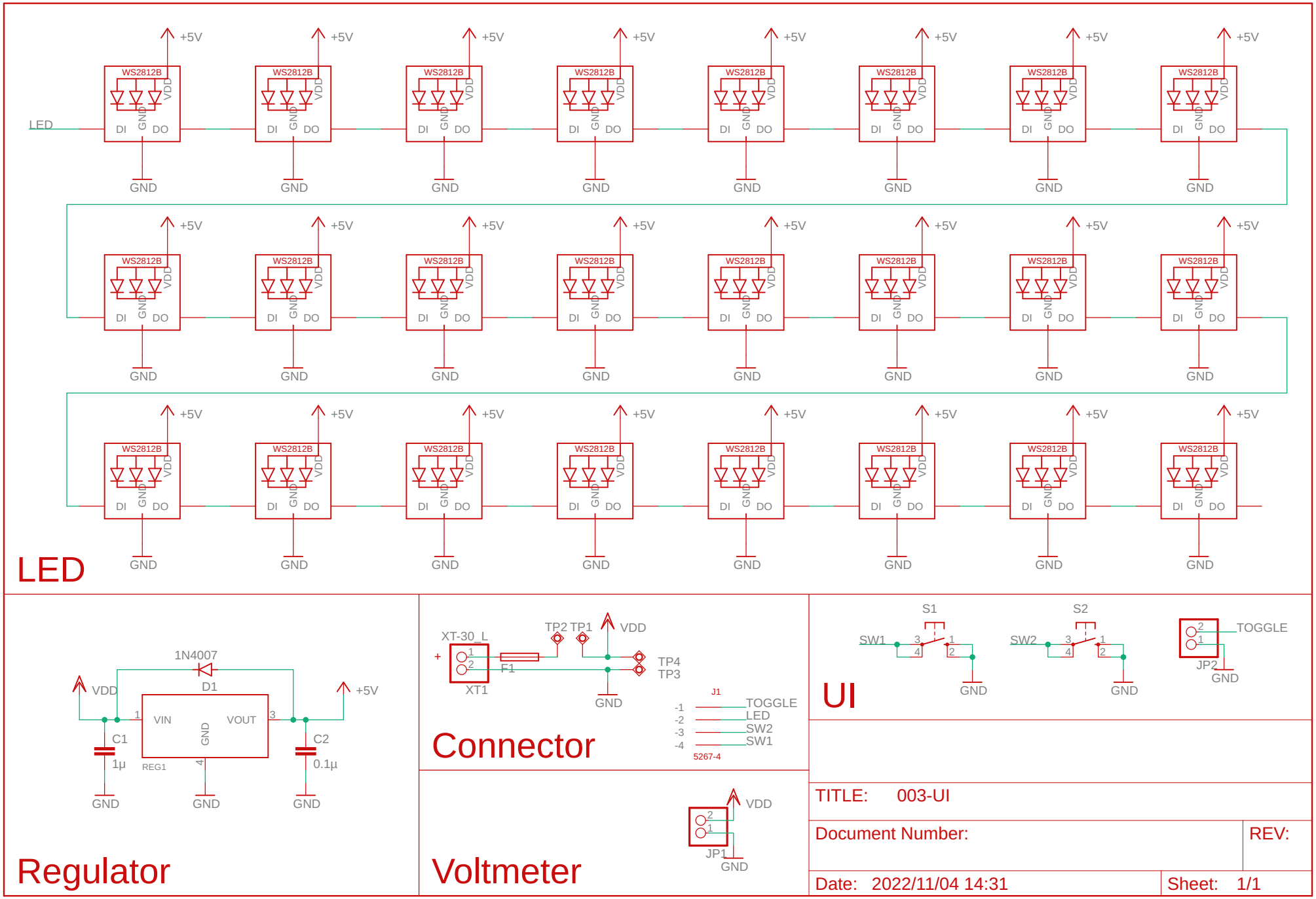

TITLE: 003-UI

Document Number:

REV:

Date: 2022/11/04 14:31

Sheet: 1/1