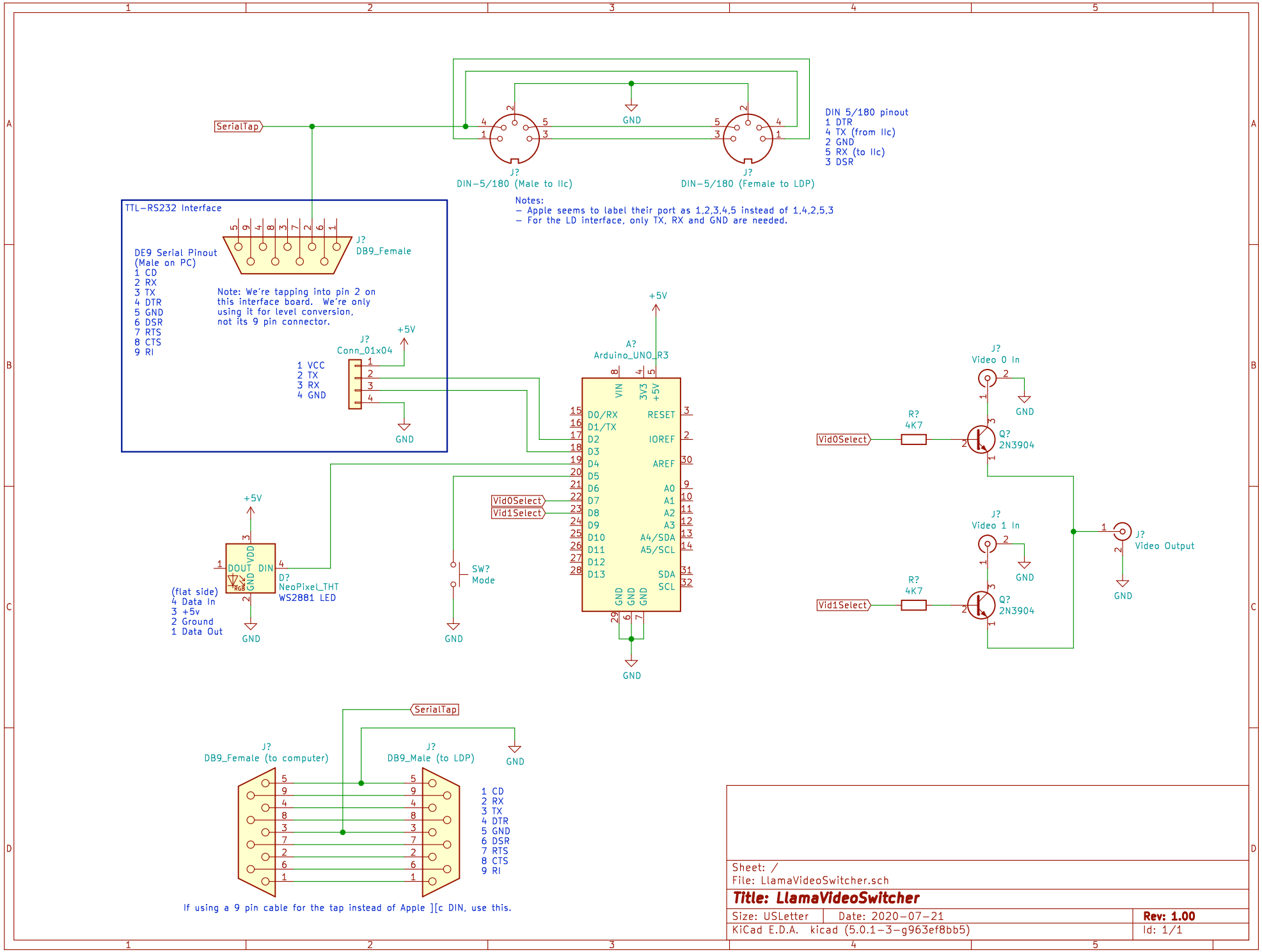

Sheet: /
File: LlamaVideoSwitcher.sch

Title: LlamaVideoSwitcher

Size: USLetter	Date: 2020-07-21	Rev: 1.00
KiCad E.D.A. kicad (5.0.1-3-g963ef8bb5)		Id: 1/1