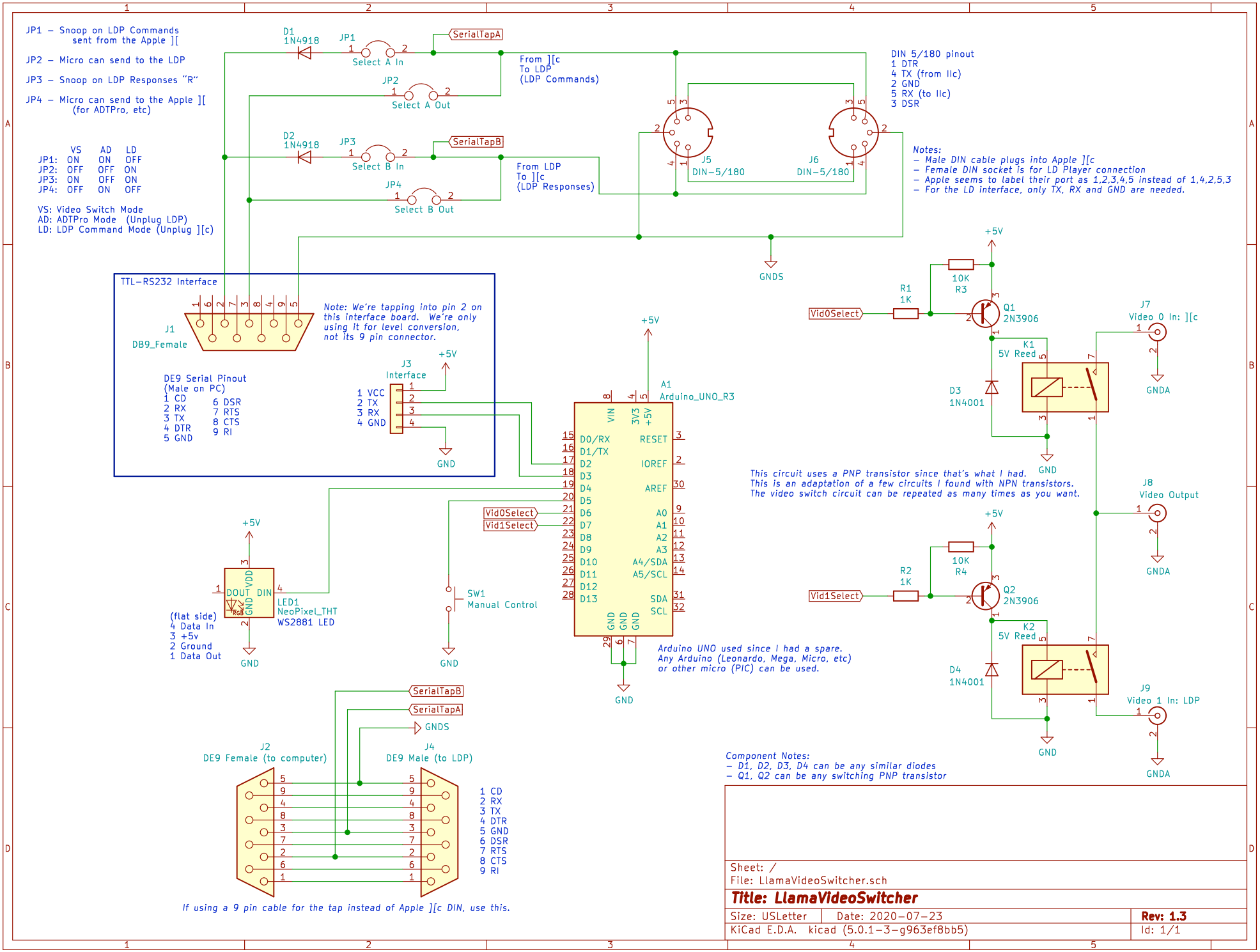
JP1 – Snoop on LDP Commands sent from the Apple][
JP2 – Micro can send to the LDP
JP3 – Snoop on LDP Responses "R"
JP4 – Micro can send to the Apple][(for ADTPro, etc)
VS AD LD
JP1: ON ON OFF
JP2: OFF OFF ON
JP3: ON OFF ON
JP4: OFF ON OFF
VS: Video Switch Mode
AD: ADTPro Mode (Unplug LDP)
LD: LDP Command Mode (Unplug][c)
D1 1N4918
D2 1N4918
JP1 Select A In
JP2 Select A Out
JP3 Select B In
JP4 Select B Out
SerialTapA
SerialTapB
From][c To LDP (LDP Commands)
From LDP To][c (LDP Responses)
DIN 5/180 pinout
1 DTR
4 TX (from IIc)
2 GND
5 RX (to IIc)
3 DSR
J5 DIN-5/180
J6 DIN-5/180
Notes:
– Male DIN cable plugs into Apple][c
– Female DIN socket is for LD Player connection
– Apple seems to label their port as 1,2,3,4,5 instead of 1,4,2,5,3
– For the LD interface, only TX, RX and GND are needed.
GNDS
TTL-RS232 Interface
J1 DB9_Female
Note: We're tapping into pin 2 on this interface board. We're only using it for level conversion, not its 9 pin connector.
DE9 Serial Pinout (Male on PC)
1 CD
2 RX
3 TX
4 DTR
5 GND
6 DSR
7 RTS
8 CTS
9 RI
J3 Interface
1 VCC
2 TX
3 RX
4 GND
+5V
GND
A1 Arduino_UNO_R3
VIN
3V3
+5V
D0/RX
D1/TX
D2
D3
D4
D5
D6
D7
D8
D9
D10
D11
D12
D13
RESET
IOREF
AREF
A0
A1
A2
A3
A4/SDA
A5/SCL
SDA
SCL
GND
Vid0Select
Vid1Select
Arduino UNO used since I had a spare. Any Arduino (Leonardo, Mega, Micro, etc) or other micro (PIC) can be used.
LED1 NeoPixel_THT WS2881 LED
DOUT DIN VDD GND
(flat side)
4 Data In
3 +5v
2 Ground
1 Data Out
SW1 Manual Control
R1 1K
R2 1K
10K R3
10K R4
Q1 2N3906
Q2 2N3906
D3 1N4001
D4 1N4001
K1 5V Reed
K2 5V Reed
J7 Video 0 In:][c
J8 Video Output
J9 Video 1 In: LDP
GNDA
This circuit uses a PNP transistor since that's what I had.
This is an adaptation of a few circuits I found with NPN transistors.
The video switch circuit can be repeated as many times as you want.
J2 DE9 Female (to computer)
J4 DE9 Male (to LDP)
1 CD
2 RX
3 TX
4 DTR
5 GND
6 DSR
7 RTS
8 CTS
9 RI
If using a 9 pin cable for the tap instead of Apple][c DIN, use this.
Component Notes:
– D1, D2, D3, D4 can be any similar diodes
– Q1, Q2 can be any switching PNP transistor
Sheet: /
File: LlamaVideoSwitcher.sch
Title: LlamaVideoSwitcher
Size: USLetter
Date: 2020-07-23
Rev: 1.3
KiCad E.D.A. kicad (5.0.1-3-g963ef8bb5)
Id: 1/1