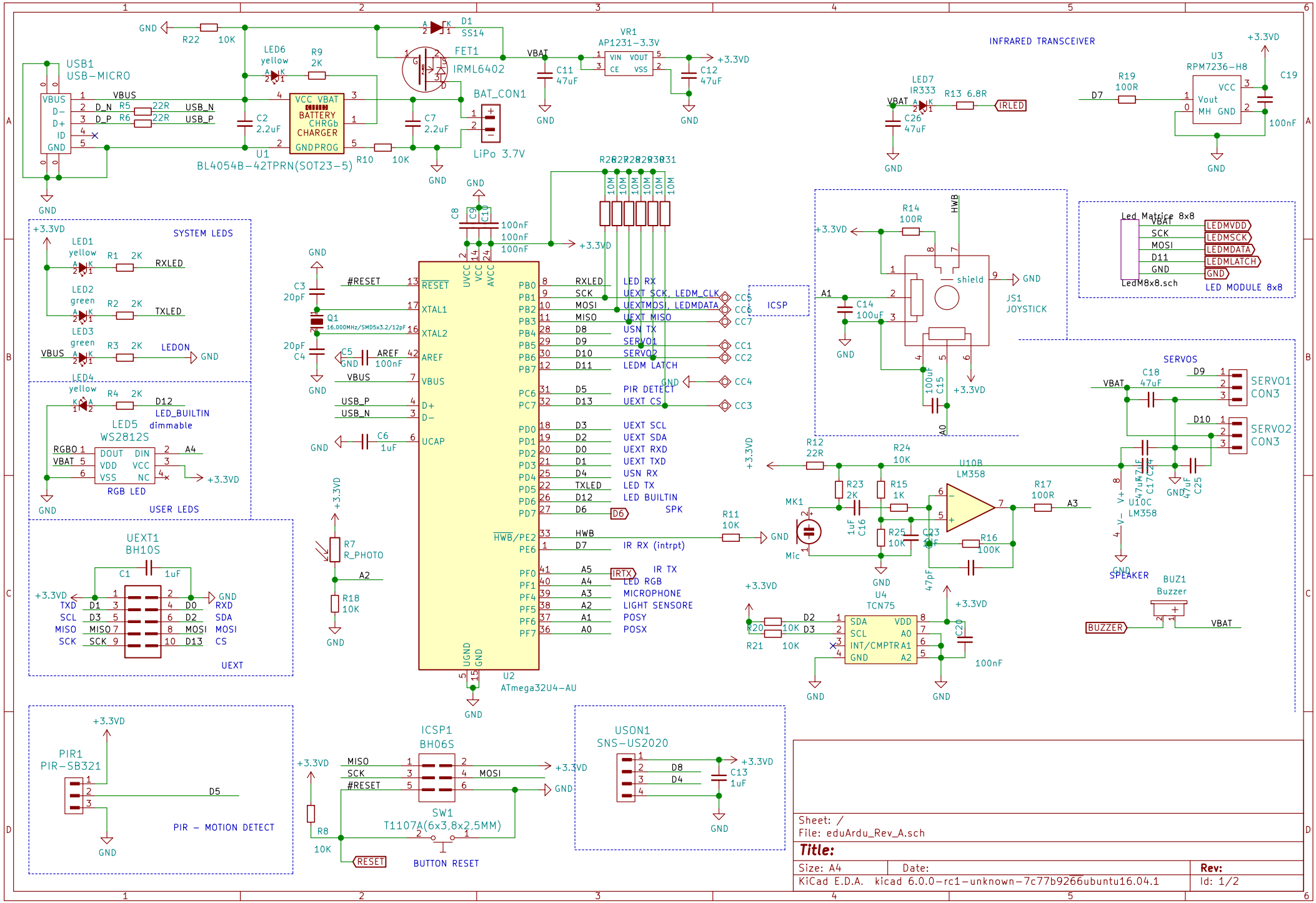
USB1
USB-MICRO
VBUS
D-
D+
ID
GND
D_N
D_P
R5 22R
R6 22R
USB_N
USB_P
R22 10K
LED6
yellow
R9
2K
D1
SS14
FET1
IRML6402
VBAT
U1
BL4054B-42TPRN(SOT23-5)
VCC VBAT
BATTERY
CHRGb
CHARGER
GNDPROG
C2
2.2uF
C7
2.2uF
R10 10K
BAT_CON1
LiPo 3.7V
VR1
AP1231-3.3V
VIN VOUT
CE VSS
C11
47uF
C12
47uF
+3.3VD
INFRARED TRANSCEIVER
LED7
IR333
R13 6.8R
IRLED
C26
47uF
R19
100R
D7
U3
RPM7236-H8
VCC
Vout
MH GND
C19
100nF
SYSTEM LEDS
LED1
yellow
R1 2K
RXLED
LED2
green
R2 2K
TXLED
LED3
green
R3 2K
LEDON
LED4
yellow
R4 2K
D12
LED_BUILTIN
dimmable
LED5
WS2812S
RGBO
VBAT
DOUT DIN
VDD VCC
VSS NC
A4
RGB LED
USER LEDS
UEXT1
BH10S
C1 1uF
TXD D1
SCL D3
MISO MISO
SCK SCK
D0 RXD
D2 SDA
MOSI MOSI
D13 CS
UEXT
C8
C9 100nF
C10 100nF
100nF
R28 R29 R30 R31
10M
C3
20pF
Q1
16.000MHz/SMD5x3.2/12pF
20pF
C4
C5 100nF
AREF
C6
1uF
#RESET
XTAL1
XTAL2
VBUS
USB_P
USB_N
UCAP
UVCC VCC AVCC
RESET
PB0 RXLED LED RX
PB1 SCK UEXT SCK, LEDM_CLK
PB2 MOSI UEXTMOSI, LEDMDATA
PB3 MISO UEXT MISO
PB4 D8 USN TX
PB5 D9 SERVO1
PB6 D10 SERVO2
PB7 D11 LEDM LATCH
PC6 D5 PIR DETECT
PC7 D13 UEXT CS
PD0 D3 UEXT SCL
PD1 D2 UEXT SDA
PD2 D0 UEXT RXD
PD3 D1 UEXT TXD
PD4 D4 USN RX
PD5 TXLED LED TX
PD6 D12 LED BUILTIN
PD7 D6 SPK
HWB/PE2 HWB
PE6 D7 IR RX (intrpt)
PF0 A5 IRTX IR TX
PF1 A4 LED RGB
PF4 A3 MICROPHONE
PF5 A2 LIGHT SENSORE
PF6 A1 POSY
PF7 A0 POSX
UGND GND
U2
ATmega32U4-AU
CC5
CC6
CC7
CC1
CC2
CC4
CC3
ICSP
R7
R_PHOTO
R18
10K
R14
100R
HWB
shield
JS1
JOYSTICK
C14
100uF
C15
100uF
A1
A0
Led Matrice 8x8
VBAT
SCK
MOSI
D11
GND
LEDMVDD
LEDMSCK
LEDMDATA
LEDMLATCH
GND
LedM8x8.sch
LED MODULE 8x8
SERVOS
C18
47uF
D9
SERVO1
CON3
D10
SERVO2
CON3
C17 47uF
C24 47uF
C25 47uF
R12
22R
R24
10K
U10B
LM358
R23
2K
R15
1K
R25
10K
C16
1uF
C23
47pF
MK1
Mic
R11
10K
R17
100R
A3
R16
100K
U10C
LM358
V+
V-
SPEAKER
BUZ1
Buzzer
BUZZER
VBAT
R20 10K
R21 10K
D2
D3
U4
TCN75
SDA
SCL
INT/CMPTR
GND
VDD
A0
A1
A2
C20
100nF
PIR1
PIR-SB321
D5
PIR - MOTION DETECT
ICSP1
BH06S
MISO
SCK
#RESET
MOSI
SW1
T1107A(6x3,8x2,5MM)
R8
10K
RESET
BUTTON RESET
USON1
SNS-US2020
D8
D4
C13
1uF
Sheet: /
File: eduArdu_Rev_A.sch
Title:
Size: A4
Date:
Rev:
KiCad E.D.A. kicad 6.0.0-rc1-unknown-7c77b9266ubuntu16.04.1
Id: 1/2

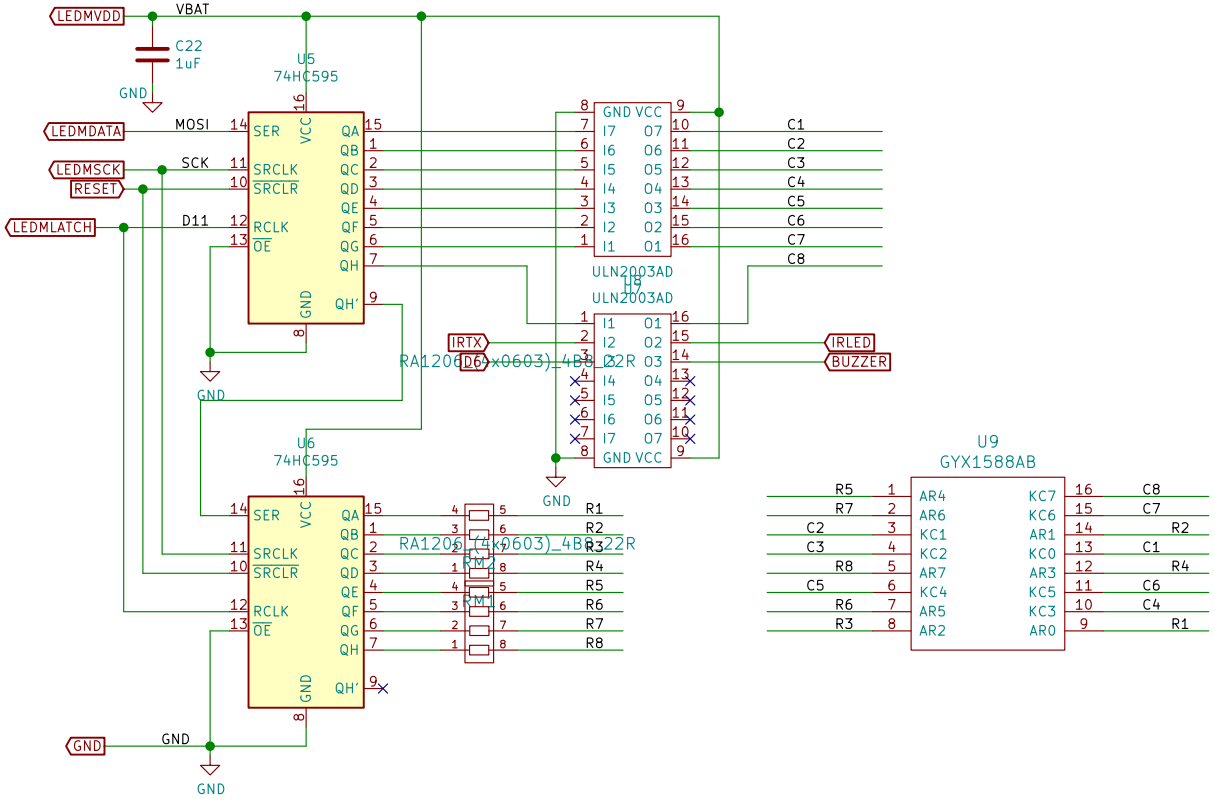

Sheet: /Led Matrice 8x8/
File: LedM8x8.sch

Title:

Size: A4	Date:	Rev:
KiCad E.D.A. kicad 6.0.0-rc1-unknown-7c77b9266ubuntu16.04.1		Id: 2/2