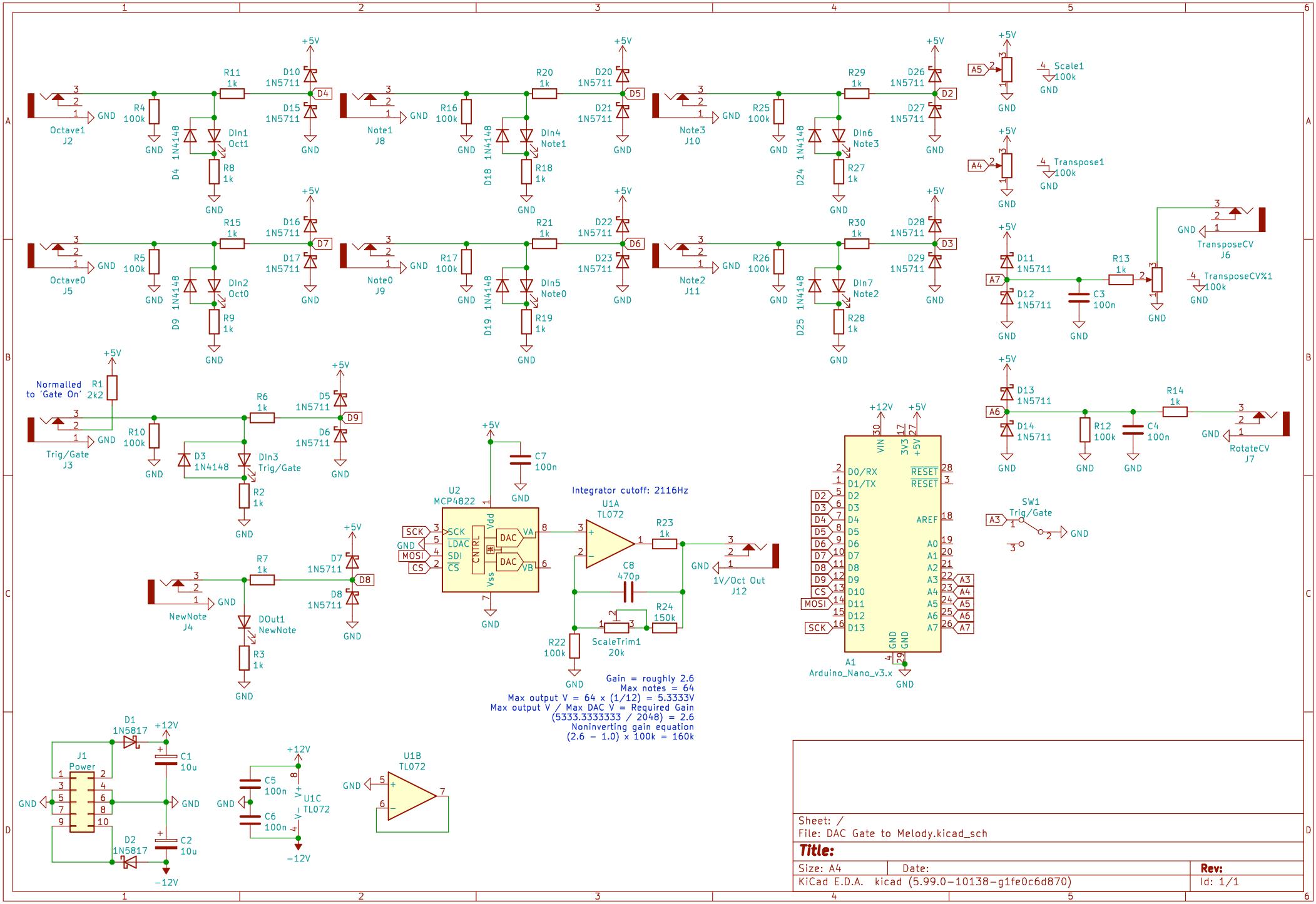

Sheet: /
File: DAC Gate to Melody.kicad_sch

Title:

Size: A4	Date:	**Rev:**
KiCad E.D.A. kicad (5.99.0-10138-g1fe0c6d870)		Id: 1/1