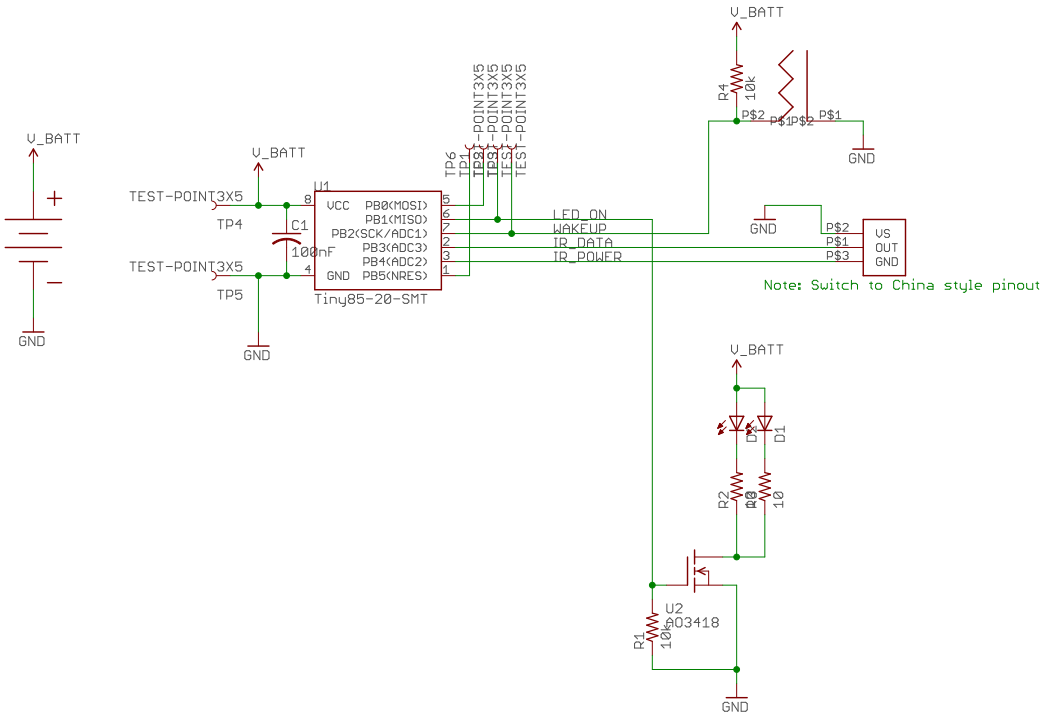

BlinkyBall

2017-10-25 19:01

Sheet: 1/1