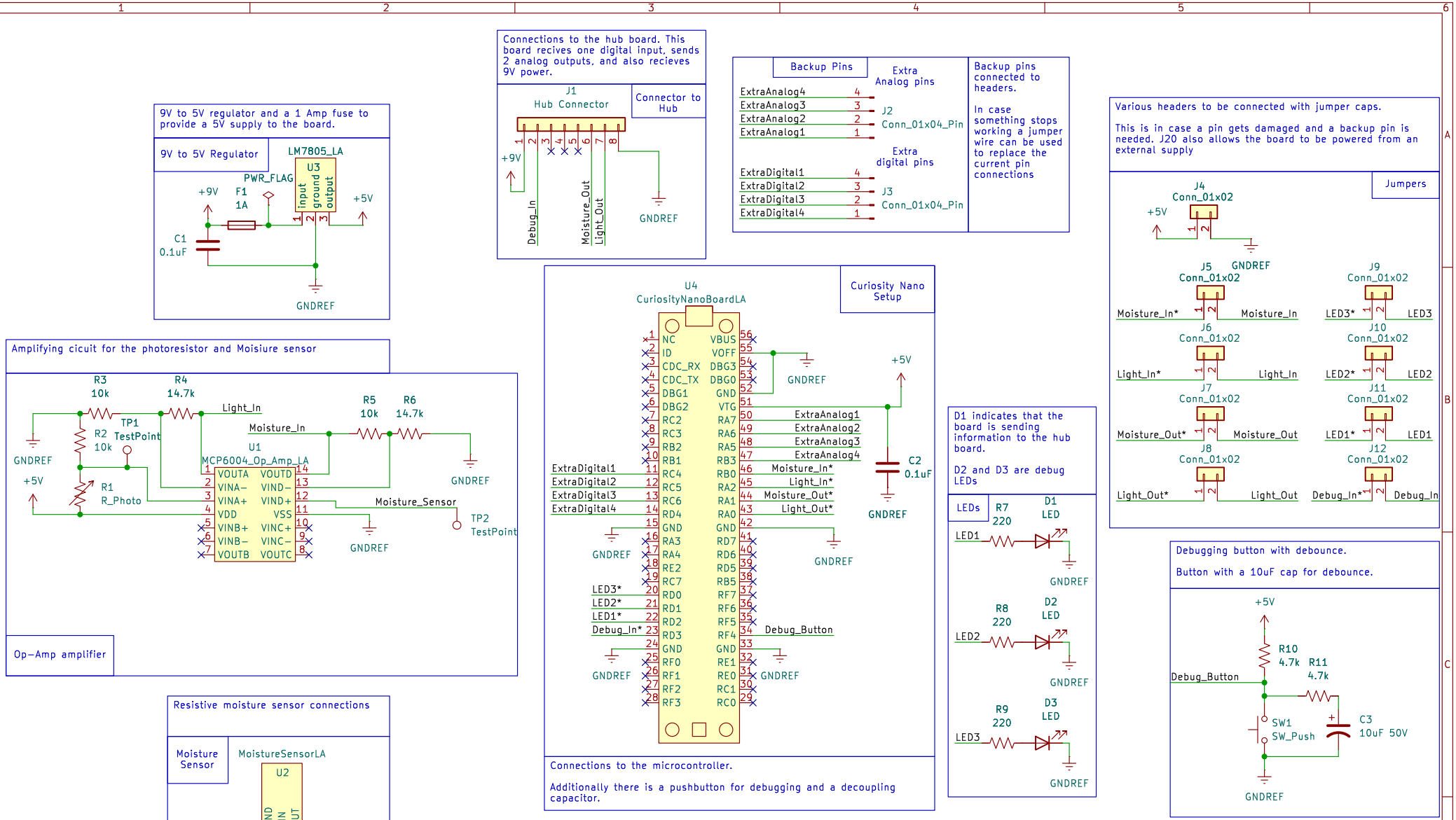
9V to 5V regulator and a 1 Amp fuse to provide a 5V supply to the board.
9V to 5V Regulator
LM7805_LA
U3
input
ground
output
PWR_FLAG
+9V
F1
1A
+5V
C1
0.1uF
GNDREF
Connections to the hub board. This board recives one digital input, sends 2 analog outputs, and also recieves 9V power.
J1
Hub Connector
Connector to Hub
+9V
Debug_In
Moisture_Out
Light_Out
GNDREF
Backup Pins
Extra Analog pins
ExtraAnalog4
ExtraAnalog3
ExtraAnalog2
ExtraAnalog1
J2
Conn_01x04_Pin
Extra digital pins
ExtraDigital1
ExtraDigital2
ExtraDigital3
ExtraDigital4
J3
Conn_01x04_Pin
Backup pins connected to headers.
In case something stops working a jumper wire can be used to replace the current pin connections
Various headers to be connected with jumper caps.
This is in case a pin gets damaged and a backup pin is needed. J20 also allows the board to be powered from an external supply
Jumpers
J4
Conn_01x02
+5V
GNDREF
J5
Conn_01x02
Moisture_In*
Moisture_In
J6
Conn_01x02
Light_In*
Light_In
J7
Conn_01x02
Moisture_Out*
Moisture_Out
J8
Conn_01x02
Light_Out*
Light_Out
J9
Conn_01x02
LED3*
LED3
J10
Conn_01x02
LED2*
LED2
J11
Conn_01x02
LED1*
LED1
J12
Conn_01x02
Debug_In*
Debug_In
Amplifying cicuit for the photoresistor and Moisiure sensor
R3
10k
R4
14.7k
Light_In
R5
10k
R6
14.7k
R2
10k
TP1
TestPoint
GNDREF
+5V
R1
R_Photo
U1
MCP6004_Op_Amp_LA
VOUTA
VINA−
VINA+
VDD
VINB+
VINB−
VOUTB
VOUTD
VIND−
VIND+
VSS
VINC+
VINC−
VOUTC
Moisture_In
Moisture_Sensor
TP2
TestPoint
Op−Amp amplifier
Resistive moisture sensor connections
Moisture Sensor
MoistureSensorLA
U2
GND
VIN
OUT
Moisture_Sensor
+5V
GNDREF
U4
CuriosityNanoBoardLA
Curiosity Nano Setup
NC
ID
CDC_RX
CDC_TX
DBG1
DBG2
RC2
RC3
RB2
RB1
RC4
RC5
RC6
RD4
GND
RA3
RA4
RE2
RC7
RD0
RD1
RD2
RD3
GND
RF0
RF1
RF2
RF3
VBUS
VOFF
DBG3
DBG0
GND
VTG
RA7
RA6
RA5
RB3
RB0
RA2
RA1
RA0
GND
RD7
RD6
RD5
RB5
RF7
RF6
RF5
RF4
GND
RE1
RE0
RC1
RC0
ExtraDigital1
ExtraDigital2
ExtraDigital3
ExtraDigital4
LED3*
LED2*
LED1*
Debug_In*
ExtraAnalog1
ExtraAnalog2
ExtraAnalog3
ExtraAnalog4
Moisture_In*
Light_In*
Moisture_Out*
Light_Out*
Debug_Button
+5V
C2
0.1uF
GNDREF
Connections to the microcontroller.
Additionally there is a pushbutton for debugging and a decoupling capacitor.
D1 indicates that the board is sending information to the hub board.
D2 and D3 are debug LEDs
LEDs
R7
220
D1
LED
LED1
R8
220
D2
LED
LED2
R9
220
D3
LED
LED3
GNDREF
Debugging button with debounce.
Button with a 10uF cap for debounce.
+5V
R10
4.7k
R11
4.7k
Debug_Button
SW1
SW_Push
C3
10uF 50V
GNDREF
Important notes:
Unless otherwise indicated all resistors are 1/4W
Unless otherwise indicated all caps are rated for 50V
Sheet: /
File: BigImportantPCB.kicad_sch
Title: Sunlight and Moisture Sensor
Size: A4
Date: 2025−10−24
Rev: 0.2.1
KiCad E.D.A. 8.0.7
Id: 1/1