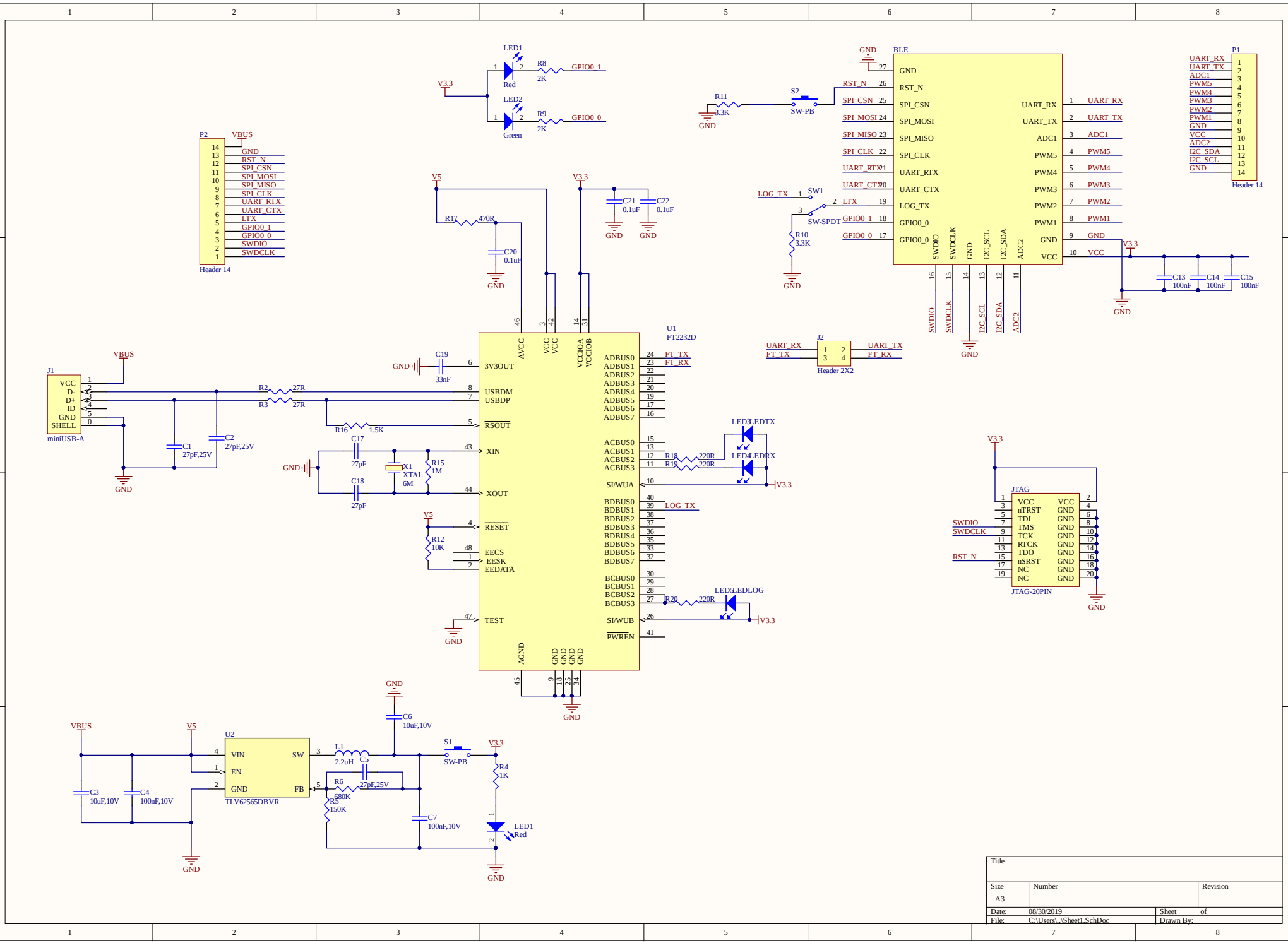

Title		
Size A3	Number	Revision
Date: 08/30/2019	Sheet	of
File: C:\Users\..\Sheet1.SchDoc	Drawn By:	