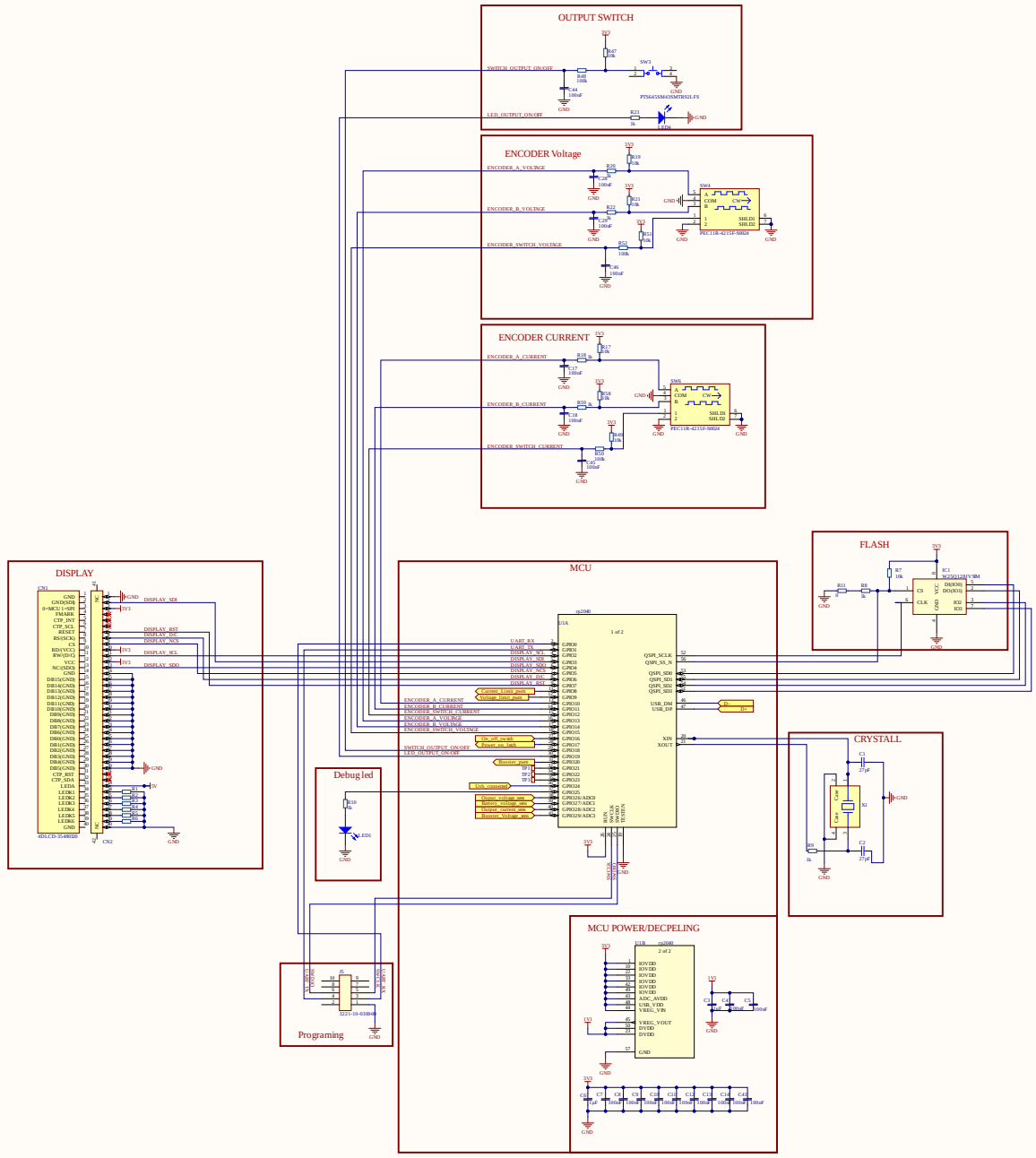


| Title | | |
|---|---|---|
| Size A1 | Number | Revision |
| Date: 5/20/2022 | Sheet of | |
| File: C:\Users...Control1.SchDoc | Drawn By: | |

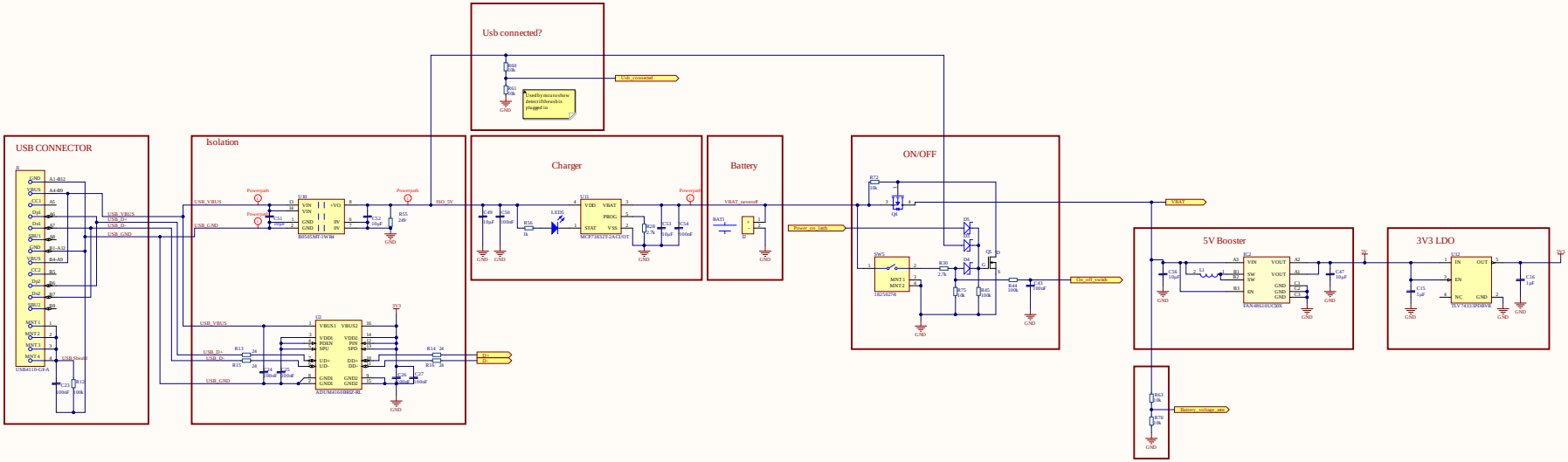


| Title | | |
|---|---|---|
| Size A1 | Number | Revision |
| Date: 5/20/2022 | Sheet of | |
| File: C:\Users\...\power2USDisc | Drawn By: | |

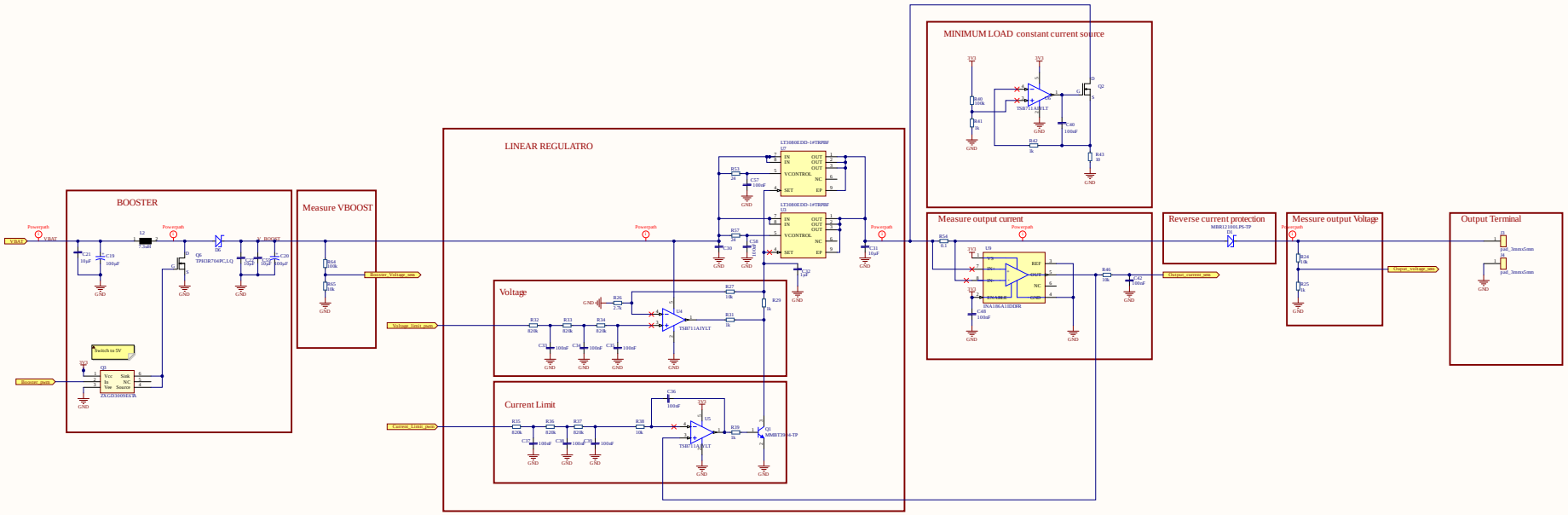


| | | | |
|---|---|---|---|
| Title | | | |
| Size A1 | Number | | Revision |
| Date: 5/20/2022 | | Sheet of | |
| File: C:\Users\...\Regulator.SchDoc | | Drawn By: | |