## OUTPUT SWITCH

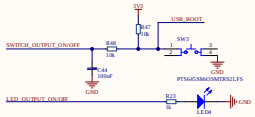


## ENCODER Voltage

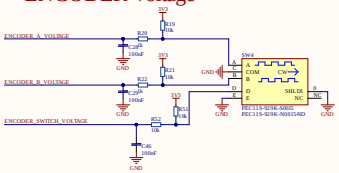


## ENCODER CURRENT

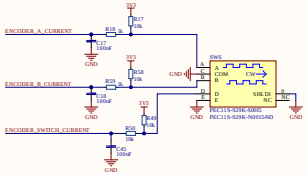


## FLASH

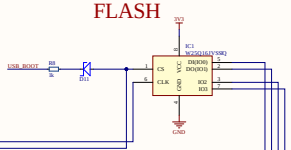


## MCU

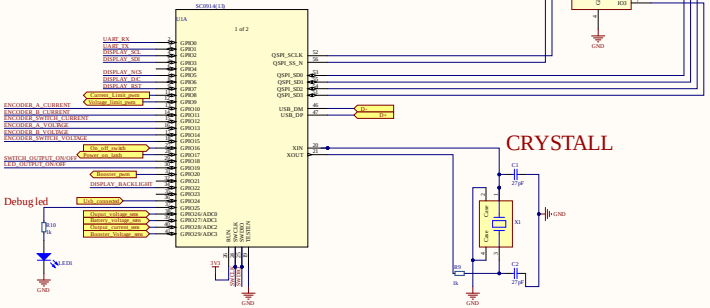


## DISPLAY

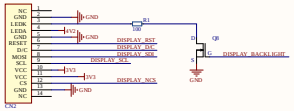


## CRYSTALL




## Debug led




## Programing

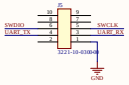


## MCU POWER/DECPELING

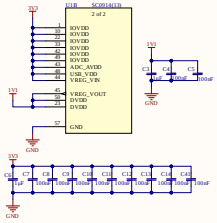


| | | |
|---|---|---|
| Title | | |
| Size: A1 | Number: | Revision: |
| Date: 5/23/2021 | | Sheet of |
| File: C:\Users\...\Control1.SchDoc | | Drawn By: |

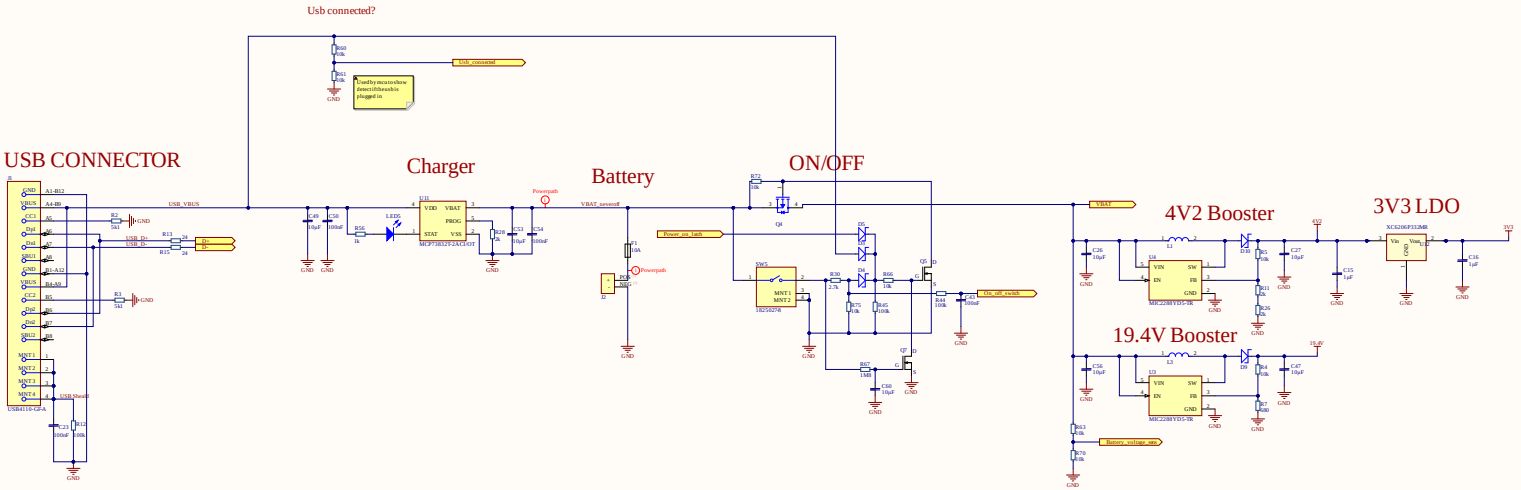


| | | |
|---|---|---|
| Title | | |
| Size A1 | Number | Revision |
| Date: 6/23/2023 | | Sheet of |
| File: C:\Users_power\SchDoc | | Drawn By: |

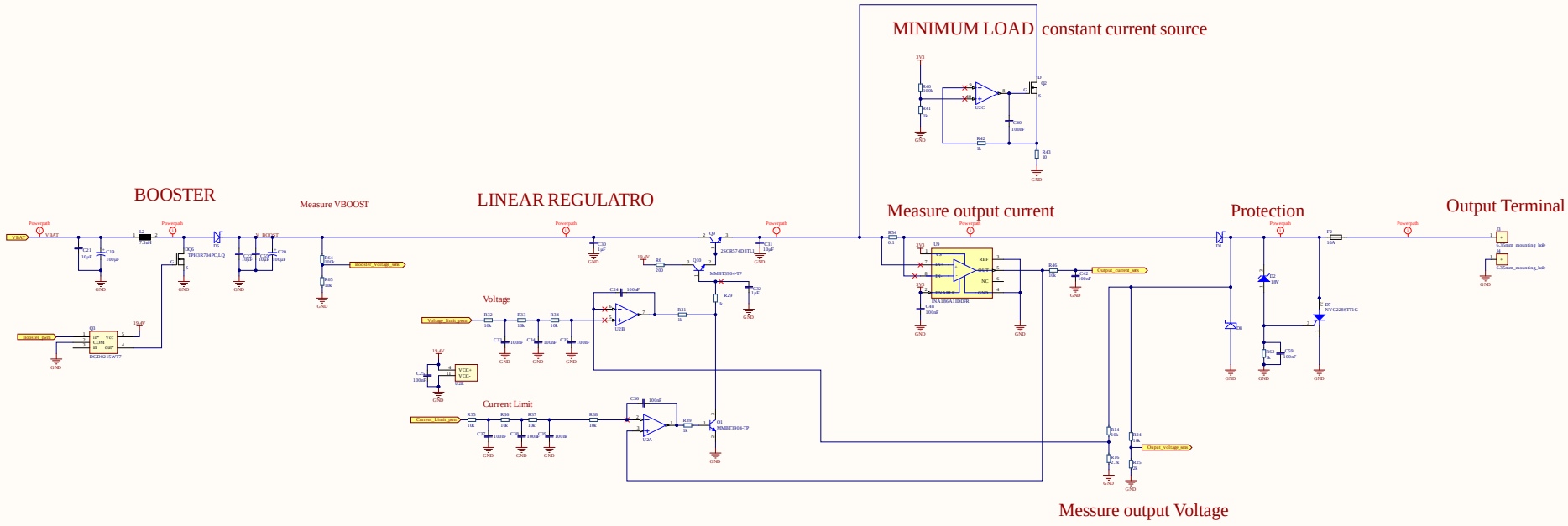
MINIMUM LOAD constant current source
BOOSTER
Measure VBOOST
LINEAR REGULATRO
Measure output current
Protection
Output Terminal
Voltage
Current Limit
Messure output Voltage