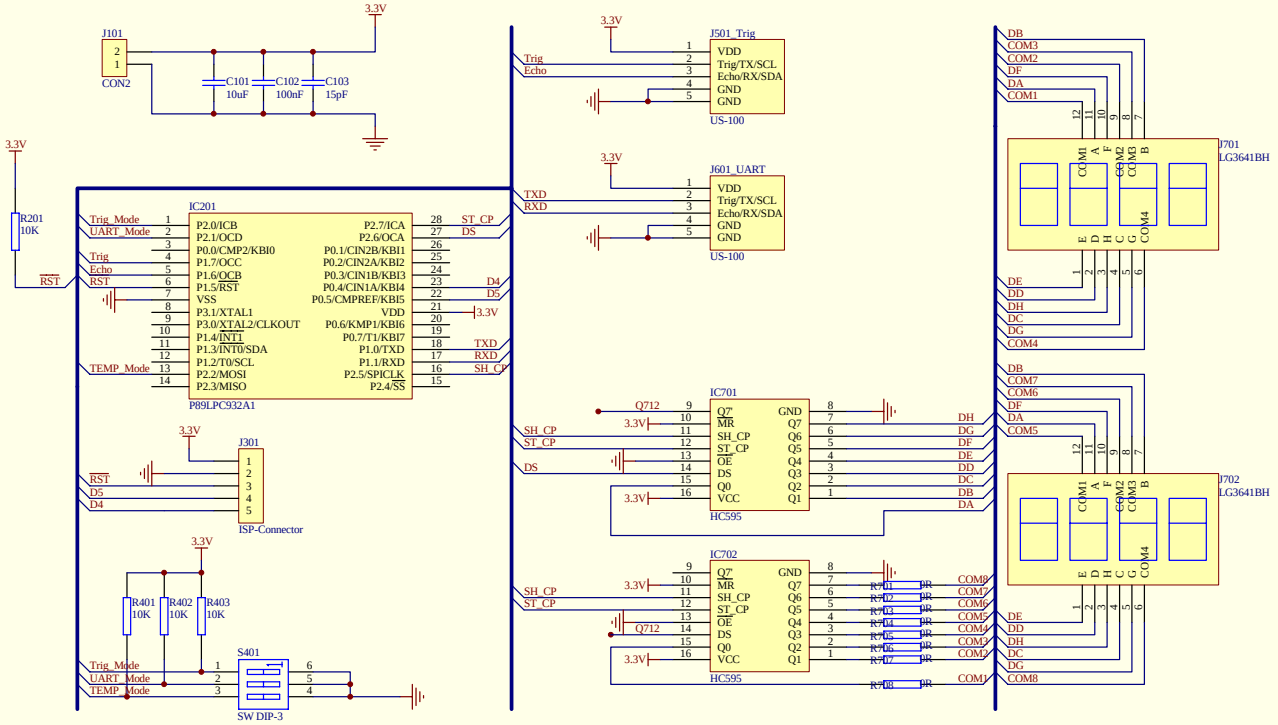


| Title | | |
|---|---|---|
| Size B | Number | Revision |
| Date: 27-Dec-2010 | | Sheet of |
| File: E:\temp\US100-使用参考.ddb | | Drawn By: |