正基科技股份有限公司

SPECIFICATION

SPEC. NO.： _____ REV： 1.1

DATE： 09. 02.2014

PRODUCT NAME： AP6212

	APPROVED	CHECKED	PREPARED	DCC ISSUE
NAME				

AMPAK

AP6212

WiFi+Bluetooth 4.0+FM RX
SIP Module Spec Sheet

Revision History

Date	Revision Content	Revised By	Version
2014/04/08	- Preliminary	Brian	1.0
2014/09/02	- Pin Definition Modified	Brian	1.1

Contents

Contents **2**
1. Introduction **3**
2. Features **4**
3. Deliverables **5**
3.1 Deliverables 5
3.2 Regulatory certifications 5
4. General Specification **6**
4.1 General Specification 6
4.2 Voltages 6
4.2.1 Absolute Maximum Ratings 6
4.2.2 Recommended Operating Rating 6
5. WiFi RF Specification **7**
5.1 2.4GHz RF Specification 7
6. Bluetooth Specification **9**
6.1 Bluetooth Specification 9
7. FM Specification **10**
7.1 FM Specification (TBD) 10
8. Pin Assignments **11**
8.1 Pin Outline 11
8.2 Pin Definition 11
9. Dimensions **13**
9.1 Physical Dimensions 13
9.2 Layout Recommendation 14
10. External clock reference **15**
10.1 SDIO Pin Description 15
11. Host Interface Timing Diagramo **16**
11.1 Power-up Sequence Timing Diagram 16
11.2 SDIO Default Mode Timing Diagram 18
11.3 SDIO High Speed Mode Timing Diagram 19
12. Recommended Reflow Profile **20**
13. Package Information **21**
13.1Label 21
13.2 Dimension 22
13.3 MSL Level / Storage Condition 24

1. Introduction

AMPAK Technology would like to announce a low-cost and low-power consumption module which has all of the WiFi, Bluetooth and FM functionalities. The highly integrated module makes the possibilities of web browsing, VoIP, Bluetooth headsets, FM radio functional applications and other applications. With seamless roaming capabilities and advanced security, also could interact with different vendors' 802.11b/g/n Access Points in the wireless LAN.

The wireless module complies with IEEE 802.11 b/g/n standard and it can achieve up to a speed of 72.2Mbps with single stream in 802.11n draft, 54Mbps as specified in IEEE 802.11g, or 11Mbps for IEEE 802.11b to connect to the wireless LAN. The integrated module provides SDIO interface for WiFi, UART / I2S / PCM interface for Bluetooth and UART / I2S / PCM interface for FM.

This compact module is a total solution for a combination of WiFi + BT + FM technologies. The module is specifically developed for Smart phones and Portable devices.

2. Features

- 802.11b/g/n single-band radio
- Bluetooth V4.0(HS) with integrated Class 1.5 PA and Low Energy (BLE) support
- Concurrent Bluetooth, FM (RX) RDS/RBDS, and WLAN operation
- Simultaneous BT/WLAN receive with single antenna
- WLAN host interface options:
  - SDIO v2.0 — up to 50 MHz clock rate
- BT host digital interface:
  - UART (up to 4 Mbps)
- FM multiple audio routing options: I2S, PCM, eSCO, A2DP
- IEEE Co-existence technologies are integrated die solution
- ECI — enhanced coexistence support, ability to coordinate BT SCO transmissions around WLAN receives

A simplified block diagram of the module is depicted in the figure below.

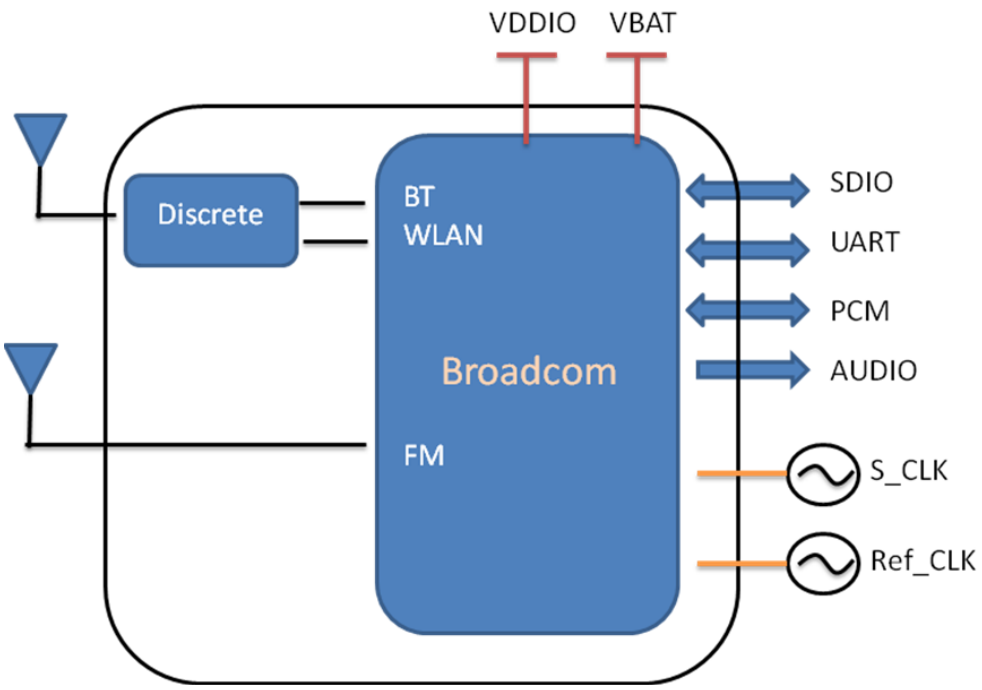

3. Deliverables

3.1 Deliverables

The following products and software will be part of the product.

- Module with packaging
- Evaluation Kits
- Software utility for integration, performance test.
- Product Datasheet.
- Agency certified pre-tested report with the adapter board.

3.2 Regulatory certifications

The product delivery is a pre-tested module, without the module level certification. For module approval, the platform's antennas are required for the certification.

4. General Specification

4.1 General Specification

Model Name	AP6212
Product Description	Support WiFi/Bluetooth/FM functionalities
Dimension	L x W x H: 12 x 12 x 1.5 (typical) mm
WiFi Interface	SDIOV2.0
BT Interface	UART / PCM
FM Interface	UART / PCM / Audio
Operating temperature	-30°C to 85°C
Storage temperature	-40°C to 85°C
Humidity	Operating Humidity 10% to 95% Non-Condensing

4.2 Voltages

4.2.1 Absolute Maximum Ratings

Symbol	Description	Min.	Max.	Unit
VBAT	Input supply Voltage	-0.5	5.5	V
WL_VIO_SD	Digital/Bluetooth/SDIO/ I/O Voltage	-0.5	3.6	V

4.2.2 Recommended Operating Rating

The module requires two power supplies: VBAT and VDDIO.

	Min.	Typ.	Max.	Unit
Operating Temperature	-30	25	85	deg.C
VBAT	3.0	3.6	4.8	V
VDDIO	1.7	3.3	3.6	V

5. WiFi RF Specification

5.1 2.4GHz RF Specification

Conditions : VBAT=3.6V ; VDDIO=3.3V ; Temp:25°C

Feature	Description
WLAN Standard	IEEE 802.11b/g/n, WiFi compliant
Frequency Range	2.400 GHz ~ 2.497 GHz (2.4 GHz ISM Band)
Number of Channels	2.4GHz：Ch1 ~ Ch14
Modulation	802.11b : DQPSK, DBPSK, CCK 802.11 g/n : OFDM /64-QAM,16-QAM, QPSK, BPSK
Output Power	802.11b /11Mbps : 16 dBm ± 1.5 dB @ EVM ≤ -9dB
	802.11g /54Mbps : 15 dBm ± 1.5 dB @ EVM ≤ -25dB
	802.11n /65Mbps : 14 dBm ± 1.5 dB @ EVM ≤ -28dB
Receive Sensitivity (11n,20MHz) @10% PER	- MCS=0 PER @ -85 dBm, typical
	- MCS=1 PER @ -84 dBm, typical
	- MCS=2 PER @ -82 dBm, typical
	- MCS=3 PER @ -80 dBm, typical
	- MCS=4 PER @ -77 dBm, typical
	- MCS=5 PER @ -73 dBm, typical
	- MCS=6 PER @ -71 dBm, typical
	- MCS=7 PER @ -68 dBm, typical
Receive Sensitivity (11g) @10% PER	- 6Mbps PER @ -86 dBm, typical
	- 9Mbps PER @ -85 dBm, typical
	- 12Mbps PER @ -85 dBm, typical
	- 18Mbps PER @ -83 dBm, typical
	- 24Mbps PER @ -81 dBm, typical
	- 36Mbps PER @ -78 dBm, typical
	- 48Mbps PER @ -73 dBm, typical
	- 54Mbps PER @ -71 dBm, typical
Receive Sensitivity (11b) @8% PER	- 1Mbps PER @ -90 dBm, typical
	- 2Mbps PER @ -88 dBm, typical
	- 5.5Mbps PER @ -87 dBm, typical
	- 11Mbps PER @ -84 dBm, typical
Data Rate	802.11b : 1, 2, 5.5, 11Mbps
	802.11g : 6, 9, 12, 18, 24, 36, 48, 54Mbps

Data Rate (20MHz ,Long GI,800ns)	802.11n: 6.5, 13, 19.5, 26, 39, 52, 58.5, 65Mbps
Data Rate (20MHz ,short GI,400ns)	802.11n : 7.2, 14.4, 21.7, 28.9, 43.3, 57.8, 65,72.2Mbps
Maximum Input Level	802.11b : -10 dBm
	802.11g/n : -20 dBm
Antenna Reference	Small antennas with 0~2 dBi peak gain

6. Bluetooth Specification

6.1 Bluetooth Specification

Conditions : VBAT=3.6V ; VDDIO=3.3V ; Temp:25°C

Feature	**Description**		
General Specification			
Bluetooth Standard	Bluetooth V4.0 of 1, 2 and 3 Mbps.		
Host Interface	UART		
Antenna Reference	Small antennas with 0~2 dBi peak gain		
Frequency Band	2402MHz ~ 2480MHz		
Number of Channels	79 channels		
Modulation	FHSS, GFSK, DPSK, DQPSK		
RF Specification			
	Min.	**Typical.**	**Max.**
Output Power (Class 1.5)		9 dBm	
Sensitivity @ BER=0.1% for GFSK (1Mbps)		-86 dBm	
Sensitivity @ BER=0.01% for π/4-DQPSK (2Mbps)		-86 dBm	
Sensitivity @ BER=0.01% for 8DPSK (3Mbps)		-80 dBm	
Maximum Input Level	GFSK (1Mbps):-20dBm		
	π/4-DQPSK (2Mbps) :-20dBm		
	8DPSK (3Mbps) :-20dBm		

7. FM Specification

7.1 FM Specification (TBD)

Conditions : VBAT=3.6V ; VDDIO=3.3V ; Temp:25°C

Feature	**Description**					
General Specification						
Frequency Band	76MHz-108MHz					
Host Interface	HCI UART, I2S/PCM					
Channel step	50 KHz					
Analog Audio output load	R_L>30KΩ , C_L>20pF					
Characteristics	**Condition**		**MIN**	**TYP**	**MAX**	**UNIT**
Transmitter (FM Tx load = 120nH, Q>30)	Output Power Level					dBuV
	Audio harmonic distortion (fmod=1KHz, △ f=75KHz, Pilot △f=6.75KHz)					%
	Audio SNR (△ f=22.5KHz, I2S audio in SNR ≧ 57dB)	MONO				dB
		Stereo				
Receiver (FM Tx Antenna = 120nH, Q>30)	RDS Sensitivity					dBm
	Audio harmonic distortion (Vin=1mV, △f=75KHz)	fmod= 1KHz				%
		fmod= 3KHz				
	Maximum SNR (fmod=1KHz,△ f=22.5 KHz, BW=300Hz to 15KHz)	MONO				dB
		Stereo				
	RF input power level					dBuV

8. Pin Assignments

8.1 Pin Outline

< TOP VIEW >

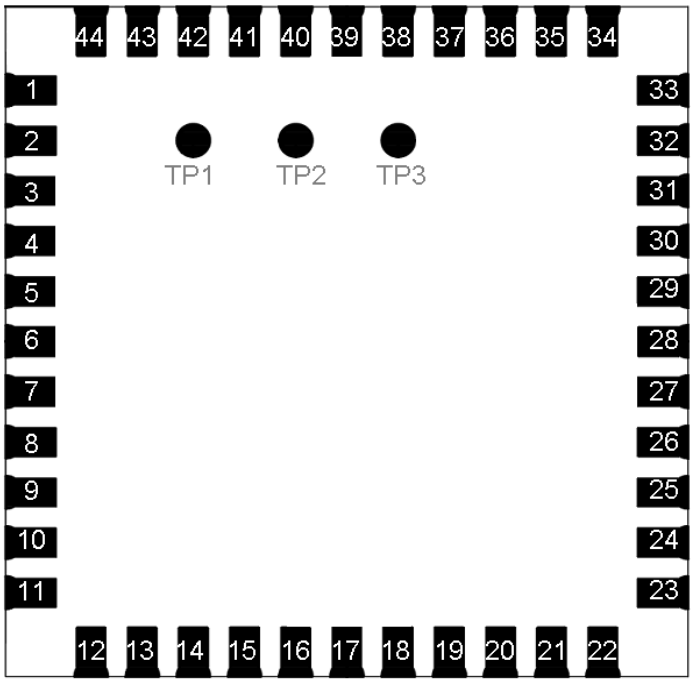

8.2 Pin Definition

NO	Name	Type	Description
1	GND	—	Ground connections
2	WL_BT_ANT	I/O	RF I/O port
3	GND	—	Ground connections
4	FM_RX	I	FM radio RF input antenna port
5	NC	—	Floating (Don’t connected to ground)
6	BT_WAKE	I	HOST wake-up Bluetooth device
7	BT_HOST_WAKE	O	Bluetooth device to wake-up HOST
8	NC	—	Floating (Don’t connected to ground)
9	VBAT	P	Main power voltage source input
10	XTAL_IN	I	Crystal input
11	XTAL_OUT	O	Crystal output
12	WL_REG_ON	I	Internal regulators power enable/disable
13	WL_HOST_WAKE	O	WLAN to wake-up HOST

14	SDIO_DATA_2	I/O	SDIO data line 2
15	SDIO_DATA_3	I/O	SDIO data line 3
16	SDIO_DATA_CMD	I/O	SDIO command line
17	SDIO_DATA_CLK	I/O	SDIO clock line
18	SDIO_DATA_0	I/O	SDIO data line 0
19	SDIO_DATA_1	I/O	SDIO data line 1
20	GND	—	Ground connections
21	VIN_LDO_OUT	P	Internal Buck voltage generation pin
22	VDDIO	P	I/O Voltage supply input
23	VIN_LDO	P	Internal Buck voltage generation pin
24	LPO	I	External Low Power Clock input (32.768KHz)
25	PCM_OUT	O	PCM Data output
26	PCM_CLK	I/O	PCM clock
27	PCM_IN	I	PCM data input
28	PCM_SYNC	I/O	PCM sync signal
29	NC	—	Floating (Don't connected to ground)
30	NC	—	Floating (Don't connected to ground)
31	GND	—	Ground connections
32	NC	—	Floating (Don't connected to ground)
33	GND	—	Ground connections
34	BT_RST_N	I	Low asserting reset for Bluetooth core
35	NC	—	Floating (Don't connected to ground)
36	GND	—	Ground connections
37	GPIO4	I/O	WiFi Co-existence pin with LTE
38	GPIO3	I/O	WiFi Co-existence pin with LTE
39	GPIO2	I/O	WiFi Co-existence pin with LTE
40	GPIO1	I/O	WiFi Co-existence pin with LTE
41	UART_RTS_N	O	Bluetooth/FM UART interface
42	UART_TXD	O	Bluetooth/FM UART interface
43	UART_RXD	I	Bluetooth/FM UART interface
44	UART_CTS_N	I	Bluetooth/FM UART interface
45	TP1	O	FM Analog AUDIO left output
46	TP2	O	FM Analog AUDIO right output
47	TP3 (NC)	—	Floating (Don't connected to ground)

9. Dimensions

9.1 Physical Dimensions

(Unit: mm)

< TOP VIEW >

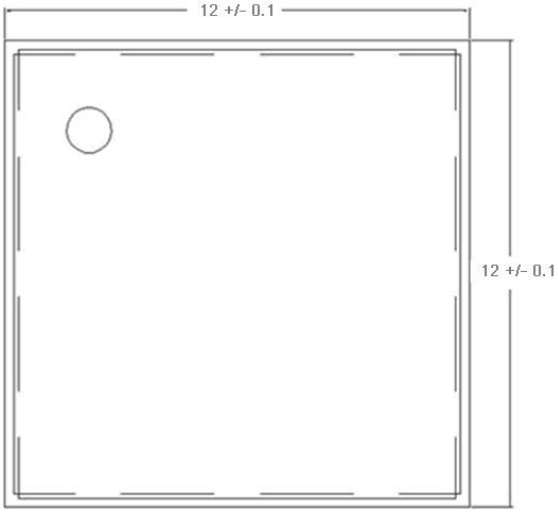

< Side View >

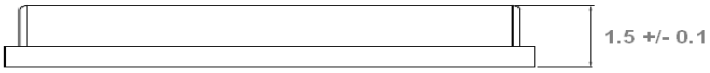

< TOP VIEW >

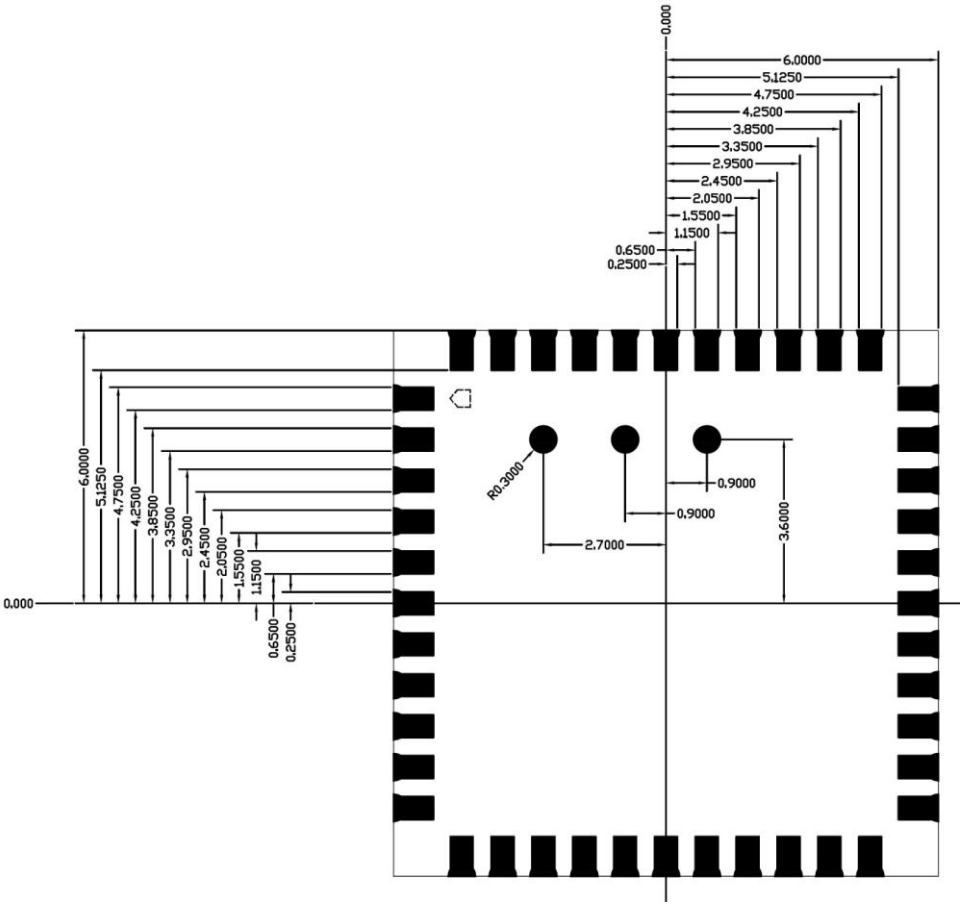

9.2 Layout Recommendation

(Unit: mm)

< TOP VIEW >

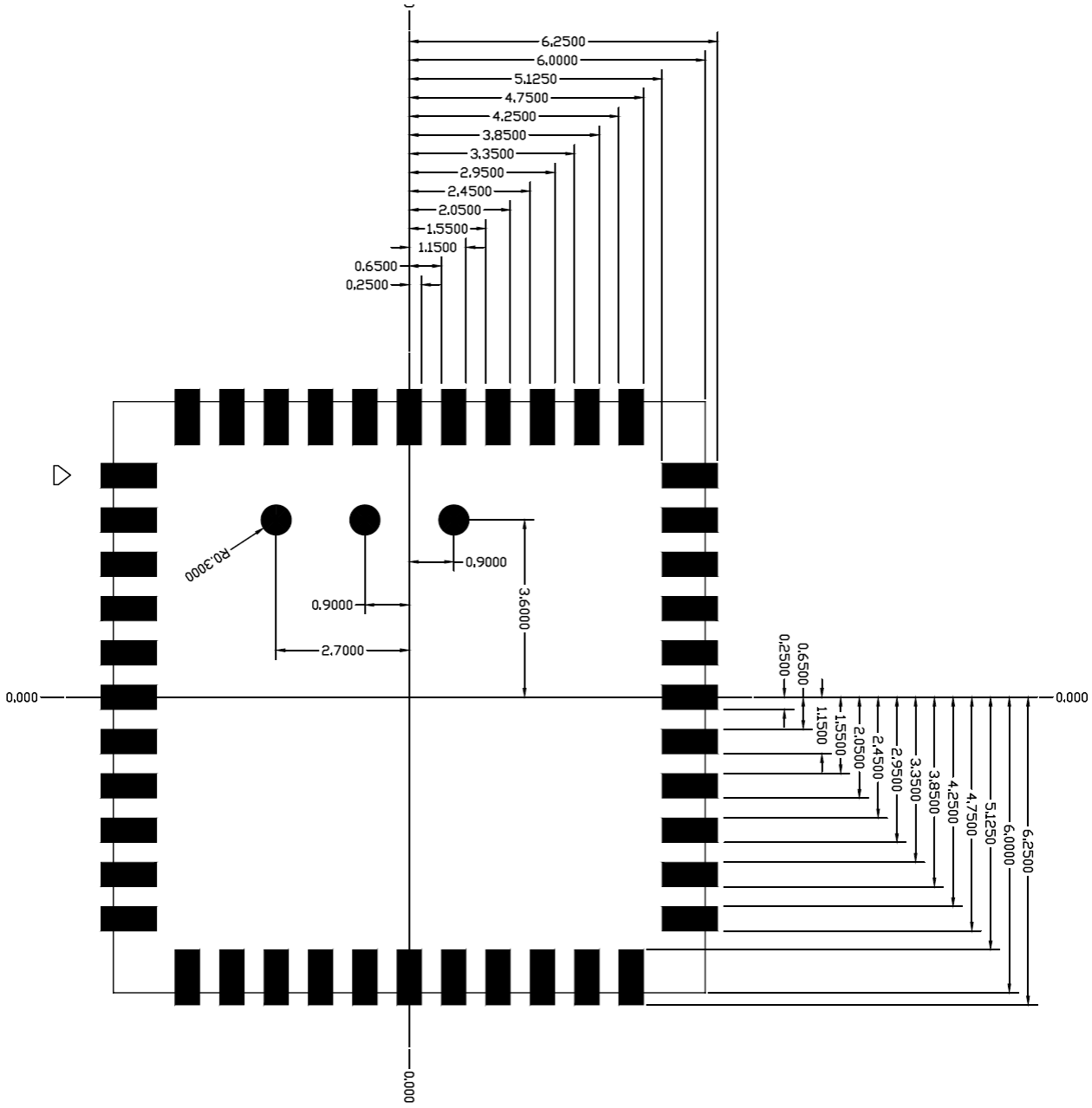

10. External clock reference

External LPO signal characteristics

Parameter	Specification	Units
Nominal input frequency	32.768	kHz
Frequency accuracy	±30	ppm
Duty cycle	30 - 70	%
Input signal amplitude	400 to 1800	mV, p-p
Signal type	Square-wave	-
Input impedance	>100k <5	Ω pF
Clock jitter (integrated over 300Hz – 15KHz)	<1	Hz
Output high voltage	0.7Vio - Vio	V

External Ref_CLK signal characteristics

No.	Item	Symb.	Electrical Specification				Remark
			Min.	Type	Max.	Units	
1	Nominal Frequency	F0	26.00000			MHz	
2	Mode of Vibration		Fundamental				
3	Frequency Tolerance	ΔF/F0	-10	-	10	ppm	at 25℃±3℃
4	Operating Temperature Range	T_{OPR}	-30	-	85	℃	
5	Frequency Stability	TC	-10	-	10	ppm	
6	Storage Temperature	T_{STG}	-55	-	125	℃	
7	Load capacitance	CL	-	16		pF	
8	Equivalent Series Resistance	ESR	-	-	50	Ω	
9	Drive Level	DL	-	100	200	μW	
10	Insulation Resistance	IR	500	-	-	MΩ	At 100V_{DC}
11	Shunt Capacitance	C0	-	-	3	pF	
12	Aging Per Year	Fa	-2	-	2	ppm	First Year

10.1 SDIO Pin Description

The module supports SDIO version 2.0 for 4-bit modes (100 Mbps), and high speed 4-bit (50 MHz clocks – 200 Mbps). It has the ability to stop the SDIO clock and map the interrupt signal into a GPIO pin. This ‘out-of-band’ interrupt signal notifies the host when the WLAN device wants to turn on the SDIO interface. The ability to force the control of the gated clocks from within the WLAN chip is also provided.

- Function 0 Standard SDIO function (Max BlockSize / ByteCount = 32B)
- Function 1 Backplane Function to access the internal System On Chip (SOC) address space (Max BlockSize / ByteCount = 64B)
- Function 2 WLAN Function for efficient WLAN packet transfer through DMA (Max BlockSize/ByteCount=512B)

SDIO Pin Description

SD 4-Bit Mode	
DATA0	Data Line 0
DATA1	Data Line 1 or Interrupt
DATA2	Data Line 2 or Read Wait
DATA3	Data Line 3
CLK	Clock
CMD	Command Line

11. Host Interface Timing Diagram

11.1 Power-up Sequence Timing Diagram

The module has signals that allow the host to control power consumption by enabling or disabling the Bluetooth, WLAN and internal regulator blocks. These signals are described below.

Additionally, diagrams are provided to indicate proper sequencing of the signals for carious operating states. The timing value indicated are minimum required values: longer delays are also acceptable.

- ※ WL_REG_ON: Used by the PMU to power up the WLAN section. When this pin is high, the regulators are enabled and the WLAN section is out of reset. When this pin is low the WLAN section is in reset.
- ※ BT_RST_N: Low asserting reset for Bluetooth and FM only. This pin has no effect on WLAN and does not control any PMU functions. This pin must be driven high or low (not left floating).

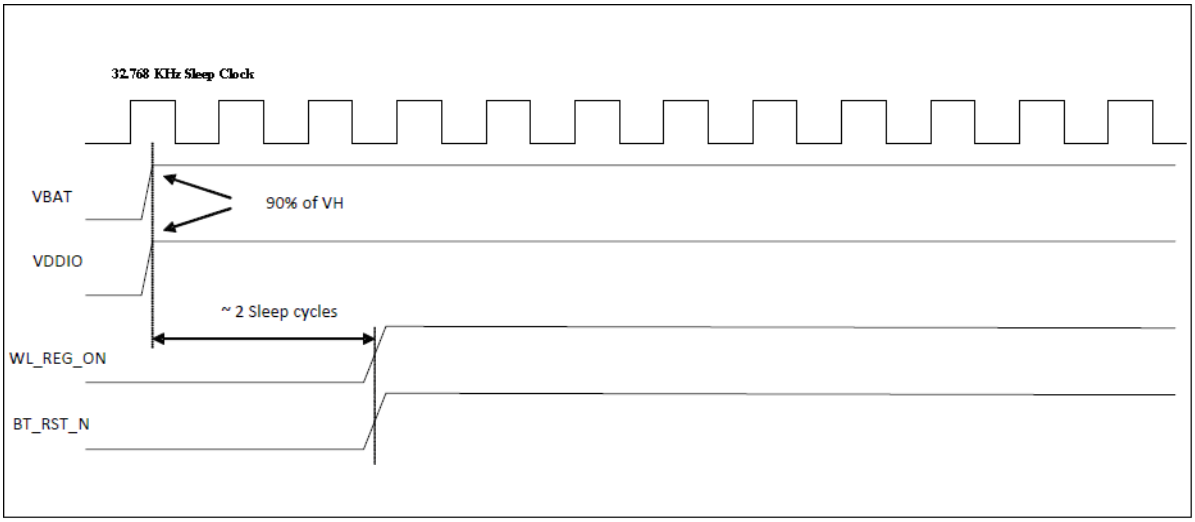

WLAN=ON, Bluetooth=ON

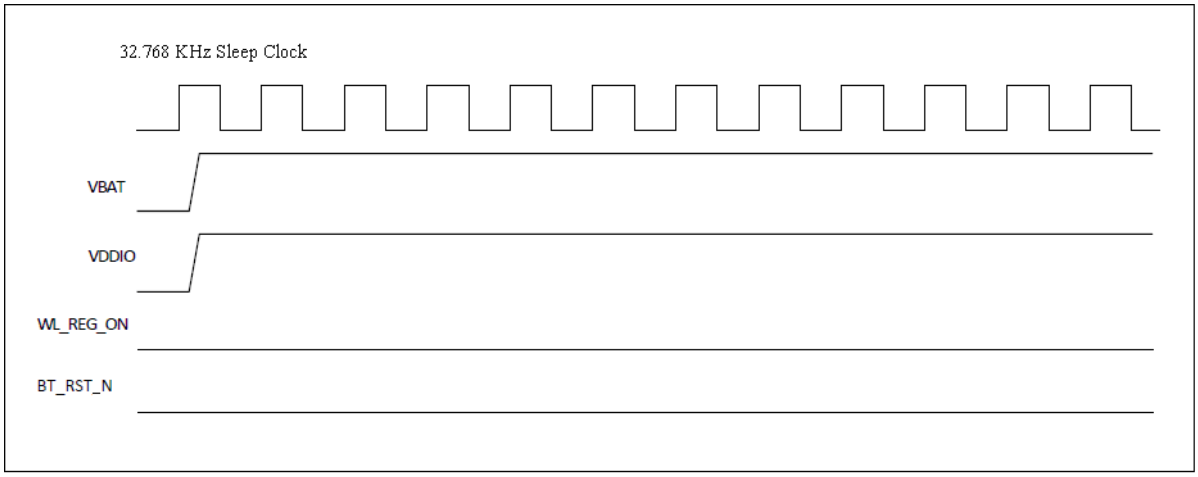

WLAN=OFF, Bluetooth=OFF

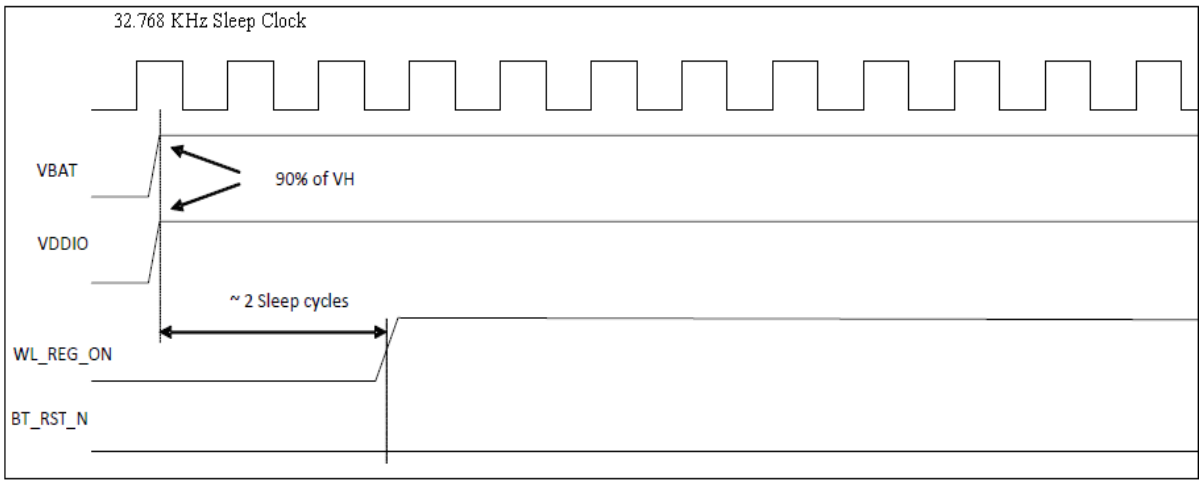

WLAN=ON, Bluetooth=OFF

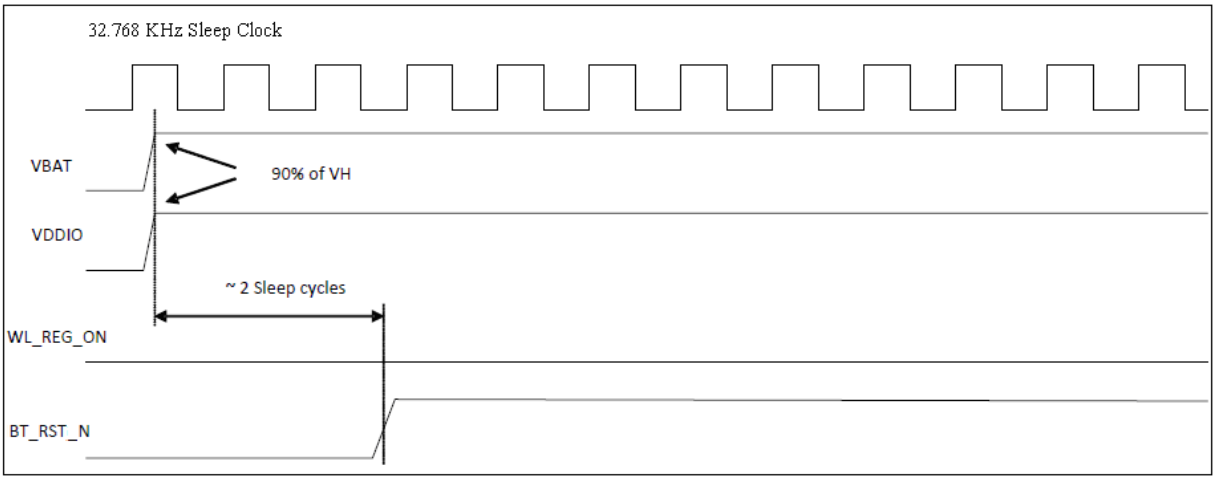

WLAN=OFF, Bluetooth=ON

11.2 SDIO Default Mode Timing Diagram

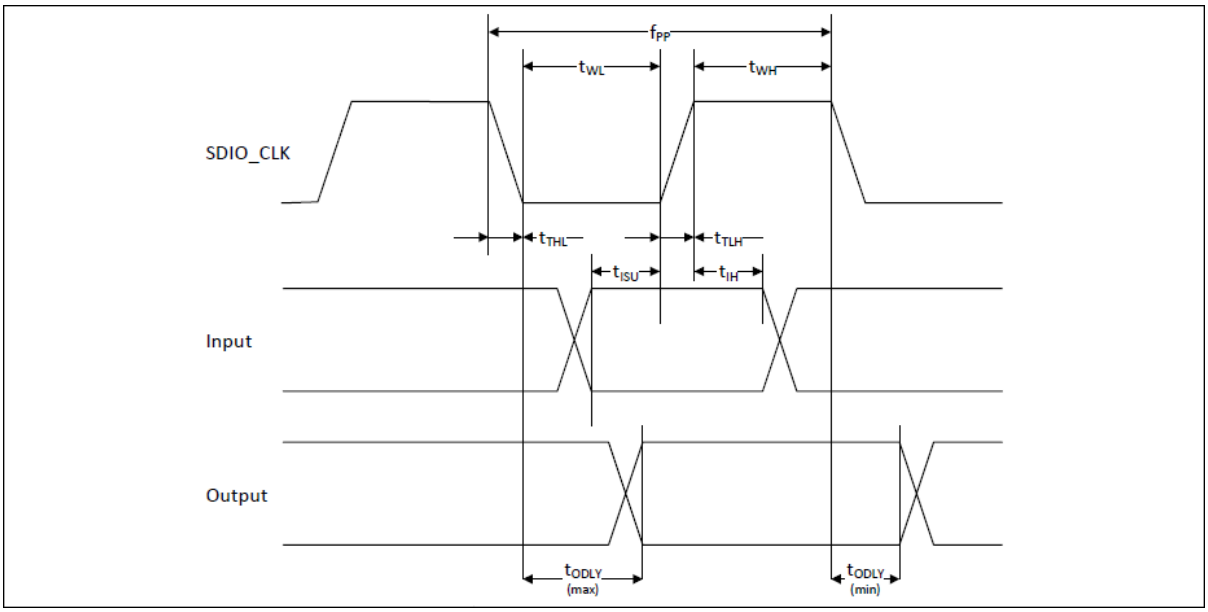

Parameter	Symbol	Minimum	Typical	Maximum	Unit
SDIO CLK (All values are refferred to minimum VIH and maximum VIL[b])					
Frequency-Data Transfer mode	fPP	0	-	25	MHz
Frequency-Identification mode	fOD	0	-	400	kHz
Clock low time	tWL	10	-	-	ns
Clock high time	tWH	10	-	-	ns
Clock rise time	tTLH	-	-	10	ns
Clock low time	tTHL	-	-	10	ns
Inputs: CMD, DAT (referenced to CLK)					
Input setup time	tISU	5	-	-	ns
Input hold time	tIH	5	-	-	ns
Outputs: CMD, DAT (referenced to CLK)					
Output delay time – Data Transfer mode	tODLY	0	-	14	ns
Output delay time – Identification mode	tODLY	0	-	50	ns

a. Timing is based on CL ≤ 40pF load on CMD and Data.
b. min(Vih) = 0.7 x VDDIO and max(Vil) = 0.2 x VDDIO.

11.3 SDIO High Speed Mode Timing Diagram

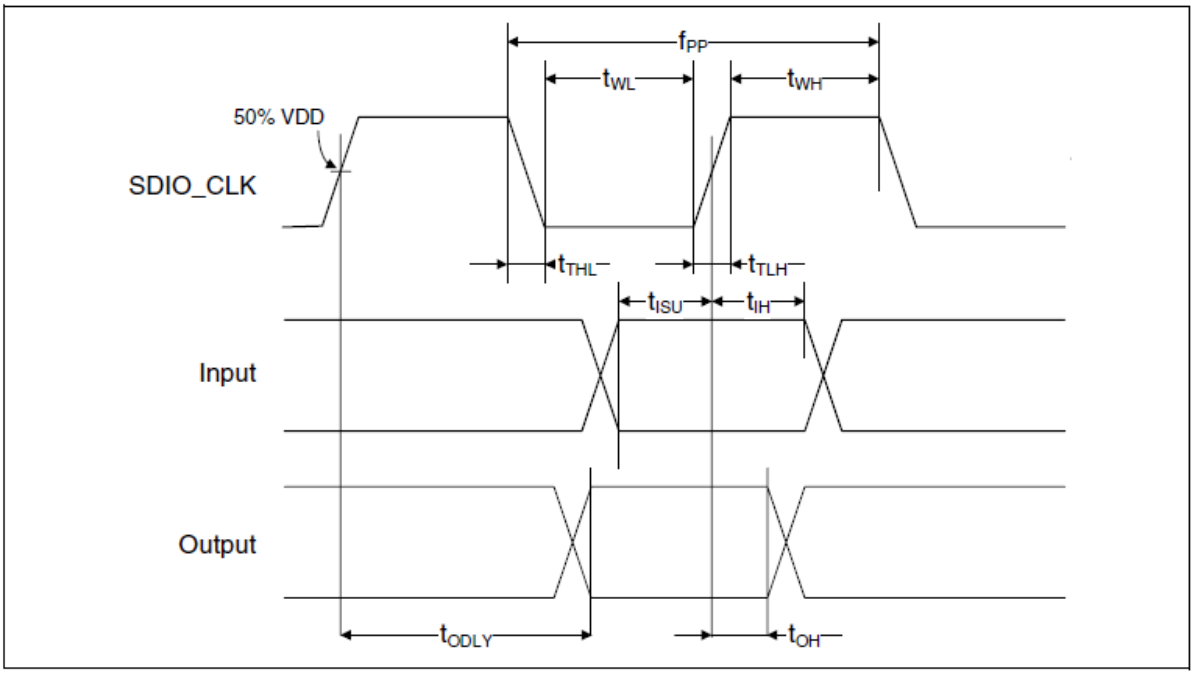

Parameter	Symbol	Minimum	Typical	Maximum	Unit
SDIO CLK (All values are refferred to minimum VIH and maximum VIL[b])					
Frequency-Data Transfer mode	fPP	0	-	50	MHz
Frequency-Identification mode	fOD	0	-	400	kHz
Clock low time	tWL	7	-	-	ns
Clock high time	tWH	7	-	-	ns
Clock rise time	tTLH	-	-	3	ns
Clock low time	tTHL	-	-	3	ns
Inputs: CMD, DAT (referenced to CLK)					
Input setup time	tISU	6	-	-	ns
Input hold time	tIH	2	-	-	ns
Outputs: CMD, DAT (referenced to CLK)					
Output delay time – Data Transfer mode	tODLY	-	-	14	ns
Output hold time	tOH	2.5	-	-	ns
Total system capacitance (each line)	CL	-	-	40	pF

a. Timing is based on CL ≤ 40pF load on CMD and Data.
b. min(Vih) = 0.7 x VDDIO and max(Vil) = 0.2 x VDDIO.

12. Recommended Reflow Profile

Referred to IPC/JEDEC standard.

Peak Temperature : <250°C

Number of Times : ≤2 times

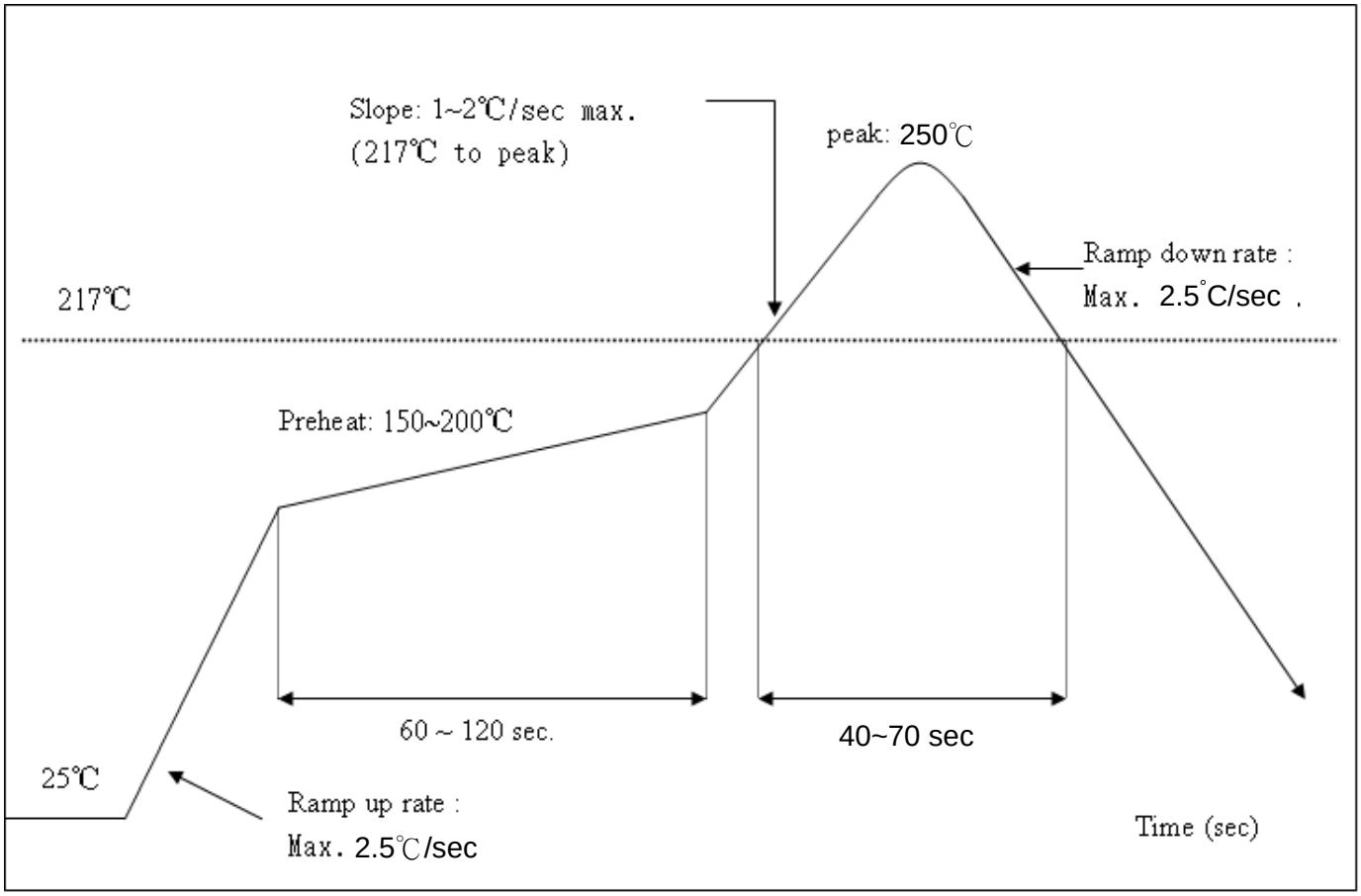

13. Package Information

13.1Label

Label A→ Anti-static and humidity notice

Label B→ MSL caution / Storage Condition

Caution
This bag contains
MOISTURE-SENSITIVE DEVICES

LEVEL
If blank, see adjacent bar code label

1. Calculated shelf life in sealed bag: 12 months at <40°C and <90% relative humidity (RH)
2. Peak package body temperature: _____°C
   If blank, see adjacent bar code label
3. After bag is opened, devices that will be subjected to reflow solder or other high temperature process must be
   a) Mounted within: _____ hours of factory conditions ≤30°C/60% RH, or
      If blank, see adjacent bar code label
   b) Stored per J-STD-033
4. Devices require bake, before mounting, if:
   a) Humidity Indicator Card reads >10% for level 2a - 5a devices or >60% for level 2 devices when read at 23 ± 5°C
   b) 3a or 3b are not met
5. If baking is required, refer to IPC/JEDEC J-STD-033 for bake procedure

Bag Seal Date: _____
If blank, see adjacent bar code label

Note: Level and body temperature defined by IPC/JEDEC J-STD-020

Label C→ Inner box label .

PKG S/N : 9PKG12013100001
Model: XXXXXXXXXXX
P/N : 99P-W01-0048R
Qty : 1500
Date Code : 1205
Lot Code : T0C102B

Label D→ Carton box label .

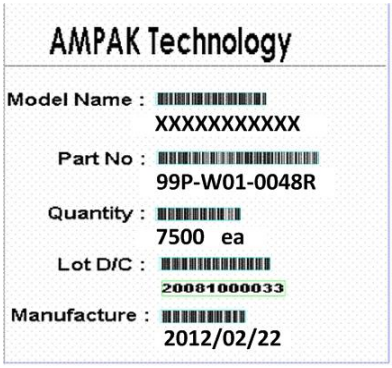

AMPAK Technology

Model Name : XXXXXXXXXXX
Part No : 99P-W01-0048R
Quantity : 7500 ea
Lot D/C : 20081000033
Manufacture : 2012/02/22

13.2 Dimension

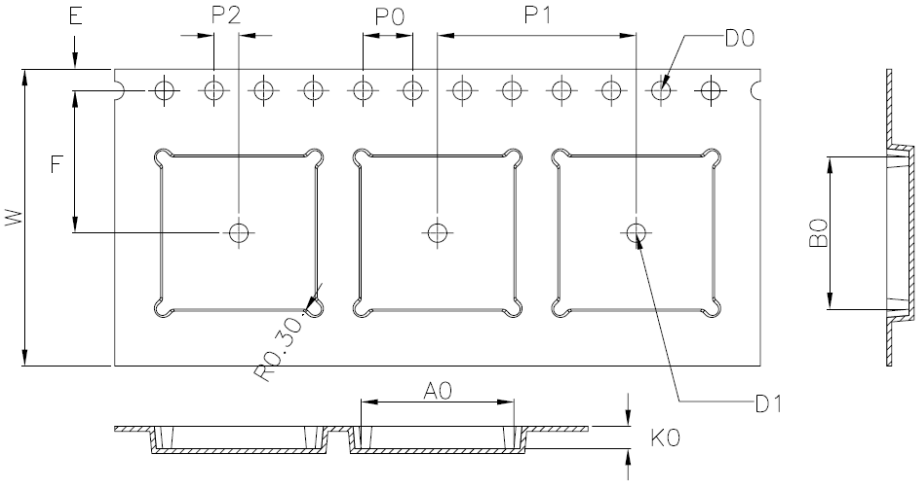

W	24.00±0.30
A0	12.30±0.10
B0	12.30±0.10
K0	1.80±0.10
E	1.75±0.10
F	11.50±0.10
P0	4.00±0.10
P1	16.00±0.10
P2	2.00±0.10
D0	$1.50^{+0.10}_{-0.00}$
D1	ø1.50MIN

1. 10 sprocket hole pitch cumulative tolerance ±0.20.
2. Carrier camber is within 1 mm in 250 mm.
3. Material : Black Conductive Polystyrene Alloy.
4. All dimensions meet EIA-481-D requirements.
5. Thickness : 0.30±0.05mm.
6. Packing length per 22" reel : 98.5 Meters.(1:3)
7. Component load per 13" reel : 1500 pcs.

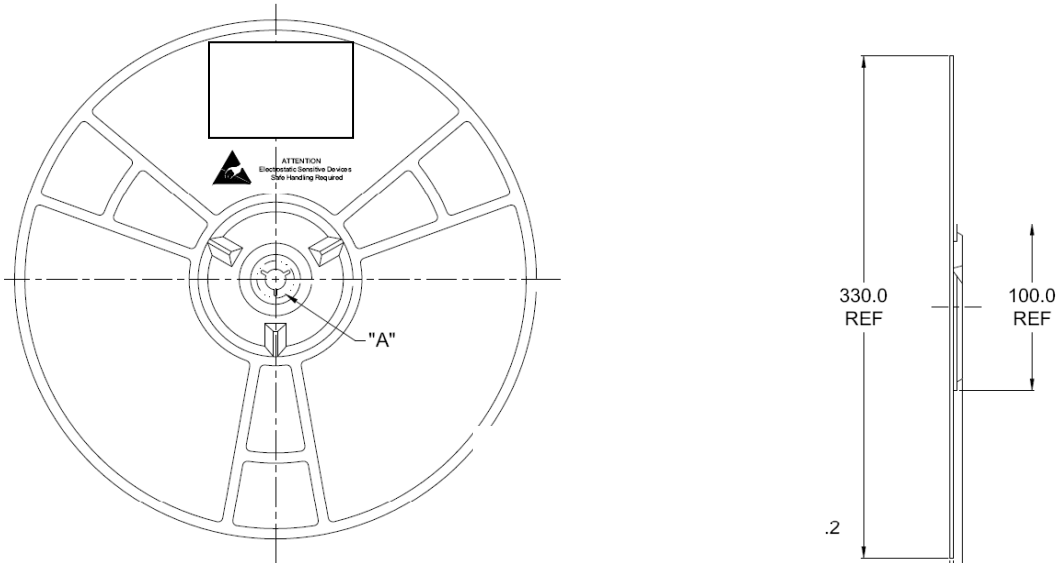

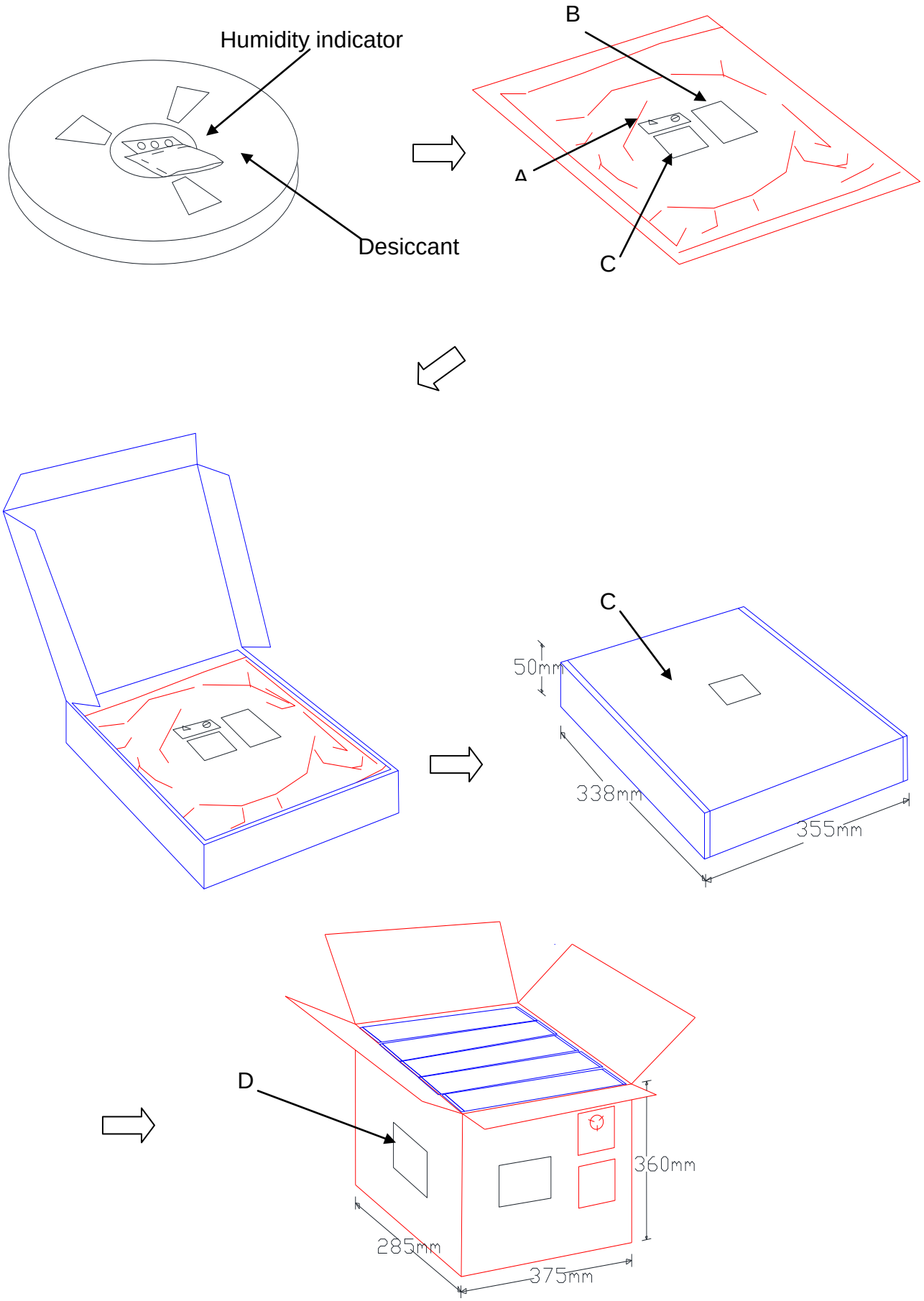
Humidity indicator
Desiccant
B
A
C
C
50mm
338mm
355mm
D
360mm
285mm
375mm

13.3 MSL Level / Storage Condition

LEVEL

4

Caution

This bag contains

MOISTURE-SENSITIVE DEVICES

Do not open except under controlled conditions

1. Calculated shelf life in sealed bag: 12 months at< 40℃ and < 90% relative humidity(RH)

2. Peak package body temperature: 225℃ ☐ 240℃ ☐ 250℃ ☑ 260℃ ☐

3. After bag is opened, devices that will be subjected to reflow solder or other high temperature process must
   a) Mounted within: 48 hours of factory conditions <30℃/60% RH, OR
   b) Stored at <10% RH

4. Devices require bake, before mounting, if:
   a)Humidity Indicator Card is>10%when read at 23±5℃
   b)3a or 3b not met

5. If baking is required, devices may be baked for 24 hours at 125±5℃

Note : If device containers cannot be subjected to high temperature or shorter bake times are desired, reference IPC/JEDEC J-STD-033 for bake procedure

Bag Seal Date: **See-SEAL DATELABEL**

Note:Level and body temperature defined by IPC/JEDED J-STD-020

※NOTE : Accumulated baking time should not exceed 96hrs