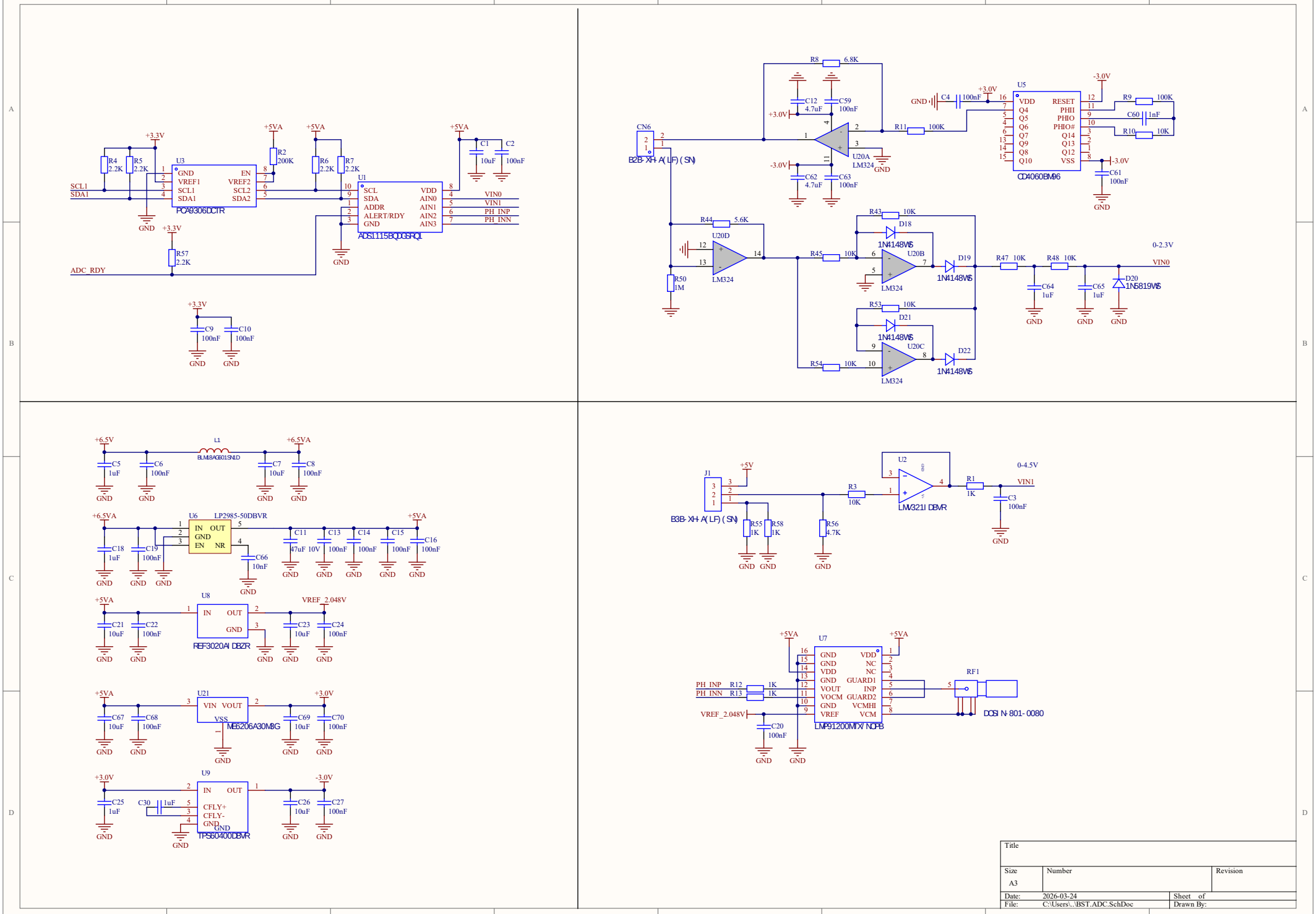
U3
PCA9306DCTR
U1
ADS1115BQDGSRQ1
SCL1
SDA1
ADC_RDY
VIN0
VIN1
PH_INP
PH_INN
CN6
B2B-XH-A(LF)(SN)
U5
CD4060BM96
U20A
U20B
U20C
U20D
LM324
0-2.3V
0-4.5V
U2
LMV321IDBVR
J1
B3B-XH-A(LF)(SN)
U6
LP2985-50DBVR
U8
REF3020AIDBZR
U21
ME6206A30M3G
U9
TPS60400DBVR
U7
LMP91200MTX/NOPB
RF1
DOSIN-801-0080
Title
Size
A3
Number
Revision
Date: 2026-03-24
File: C:\Users\..\BST.ADC.SchDoc
Sheet of
Drawn By:

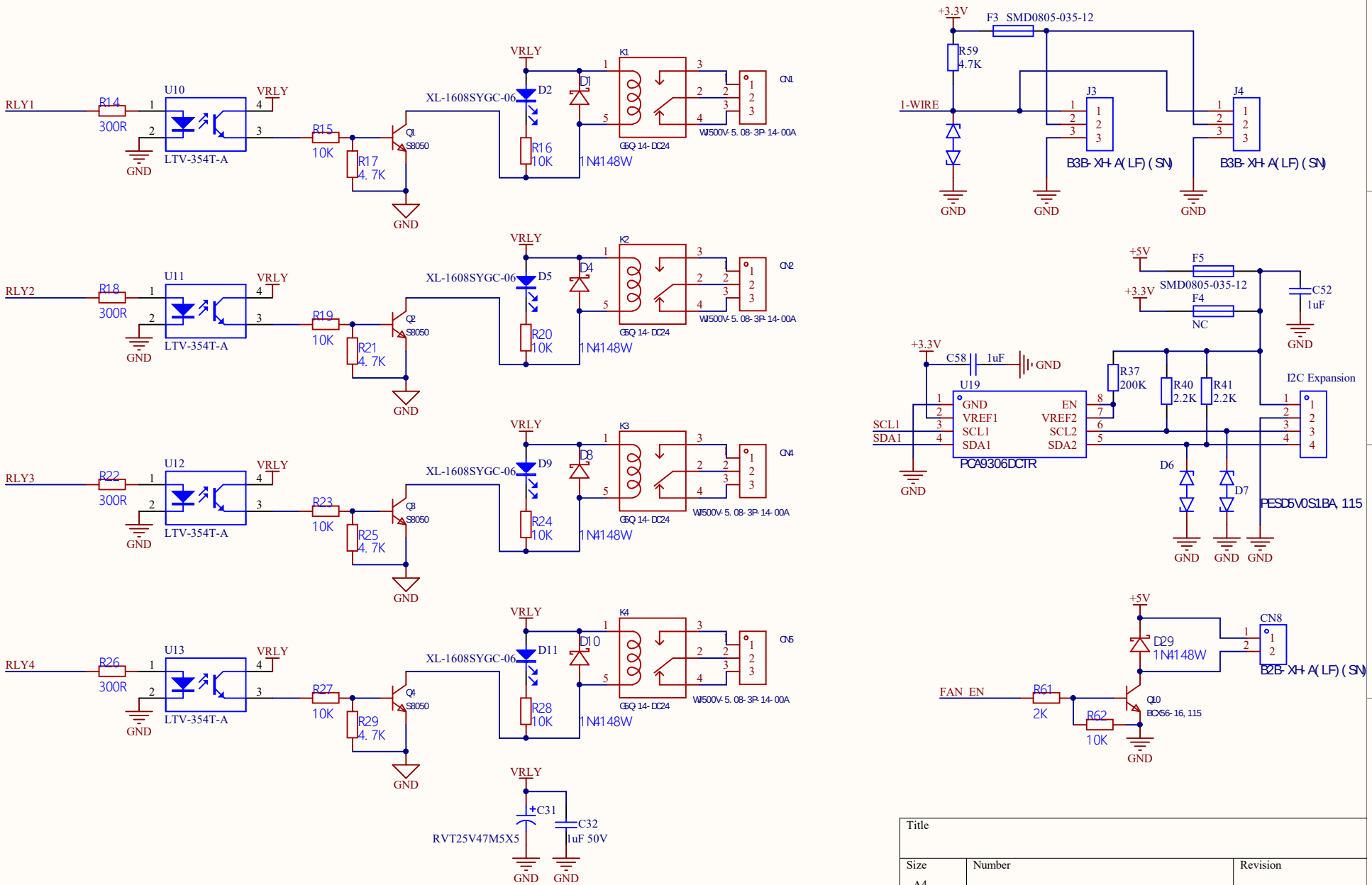

Title		
Size A4	Number	Revision
Date: 2026-03-24		Sheet of
File: C:\Users\...\BST.IO.SchDoc		Drawn By:

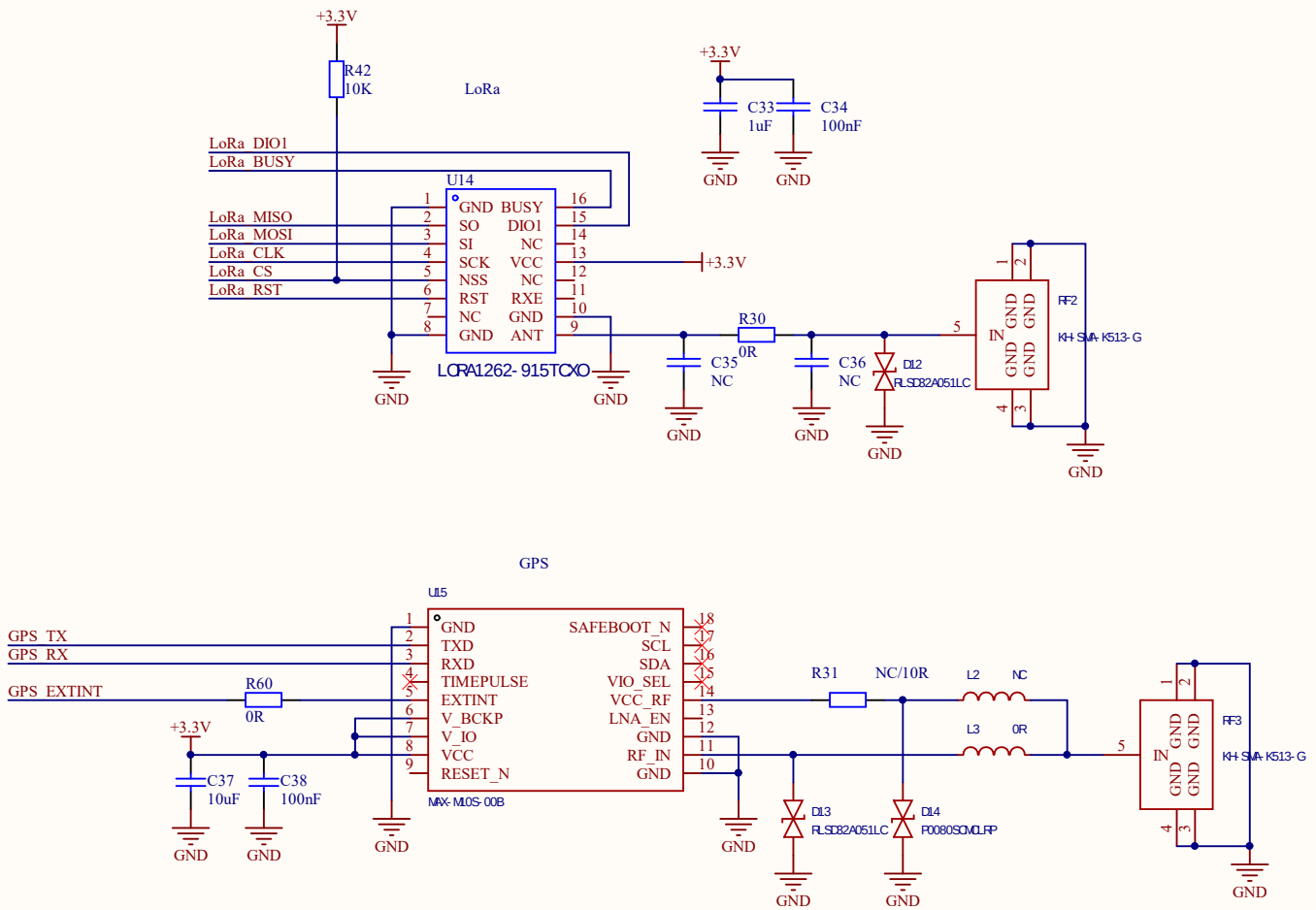

Title		
Size A4	Number	Revision
Date: 2026-03-24		Sheet of
File: C:\Users\...\BST.LoRa&GPS.SchDoc		Drawn By:

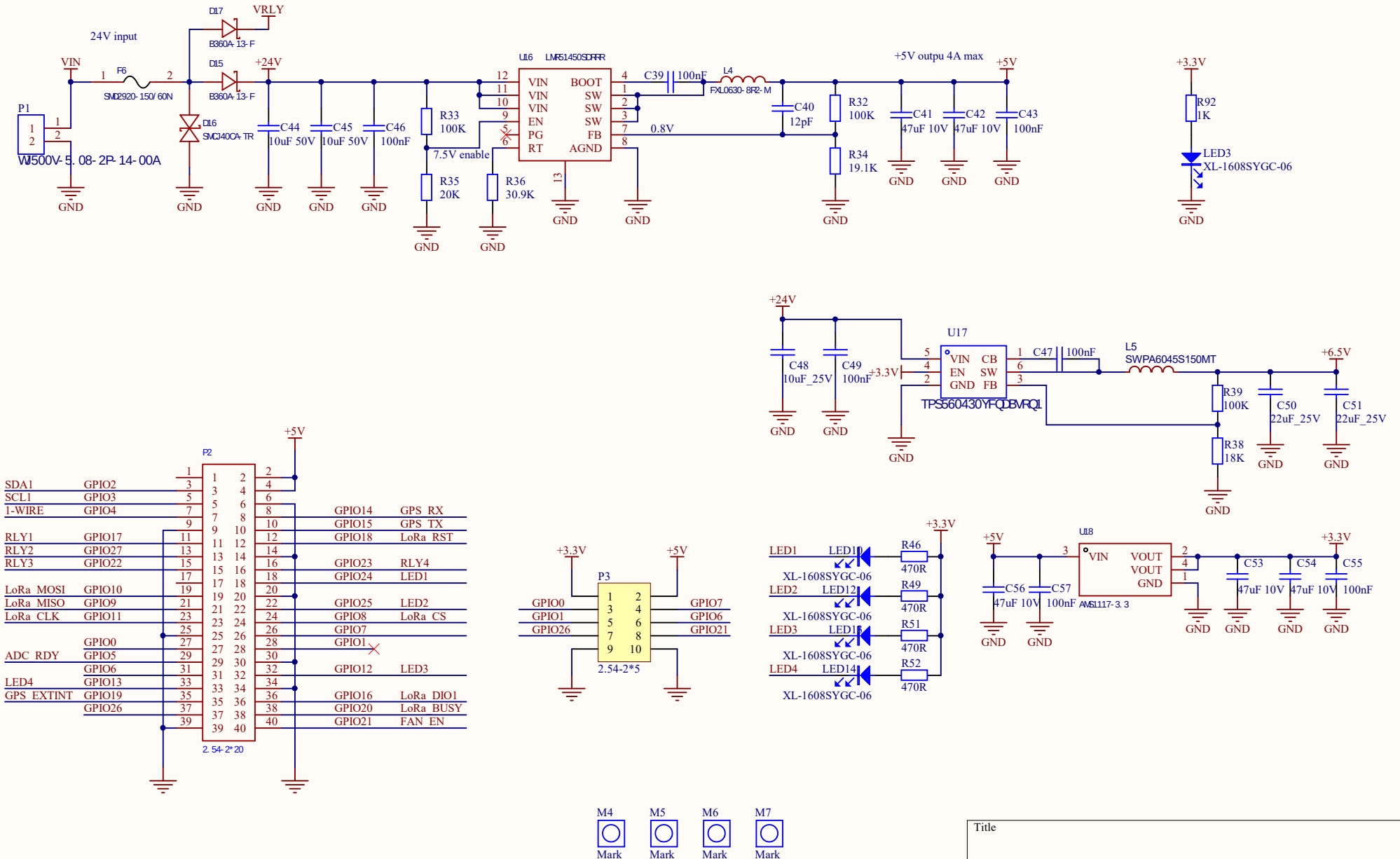

Title		
Size A4	Number	Revision
Date: 2026-03-24		Sheet of
File: C:\Users\...\BST.PWR.SchDoc		Drawn By:

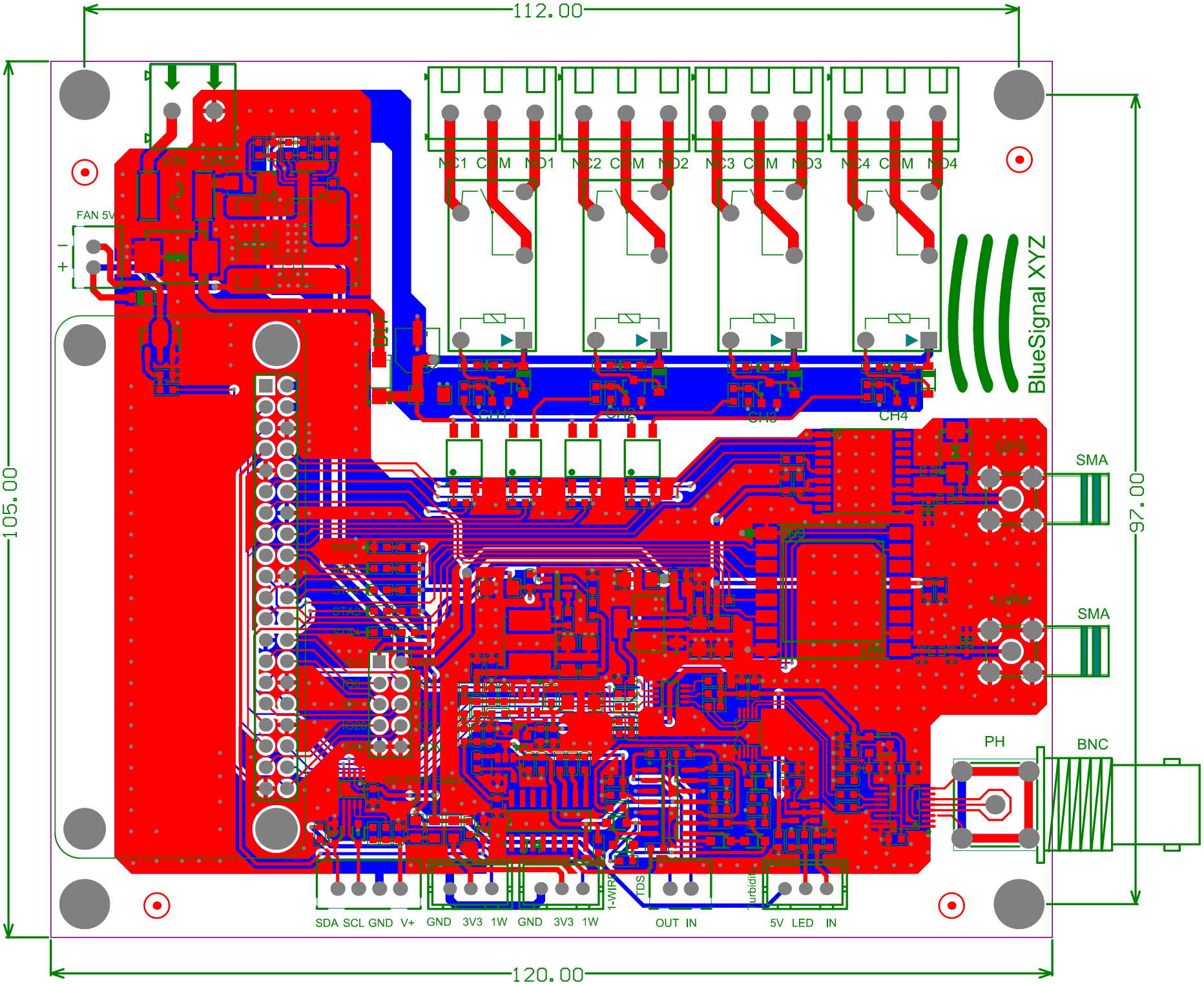
112.00
105.00
97.00
120.00
VIN
GND
FAN 5V
+
-
NC1 COM NO1
NC2 COM NO2
NC3 COM NO3
NC4 COM NO4
CH1
CH2
CH3
CH4
BlueSignal XYZ
GPS
SMA
LoRa
SMA
PH
BNC
PWR
3V3
GND
I2C PWM select
SDA SCL GND V+
GND 3V3 1W
GND 3V3 1W
1-WIRE
TDS
OUT IN
Turbidity
5V LED IN