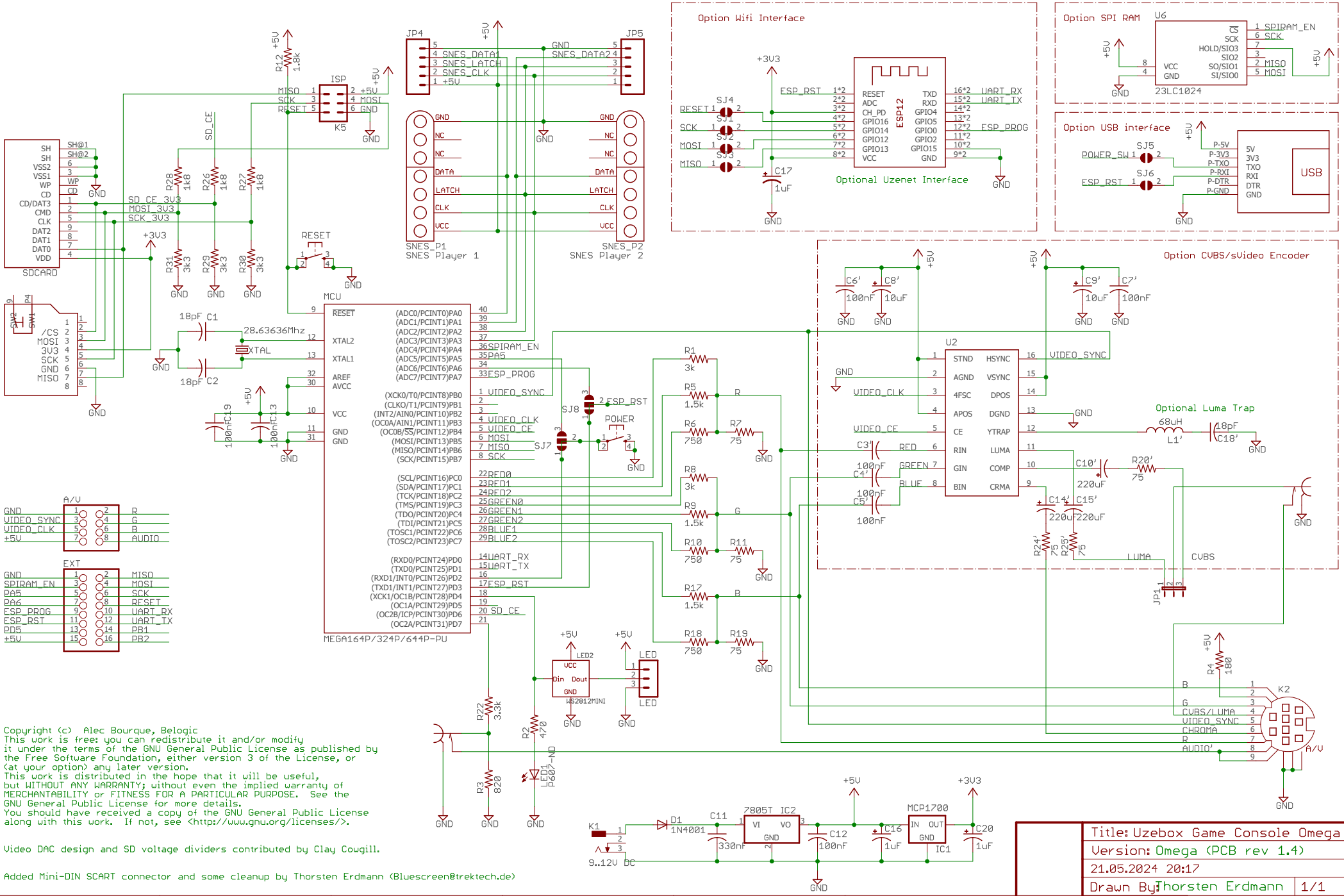

Copyright (c) Alec Bourque, Belogic
This work is free: you can redistribute it and/or modify
it under the terms of the GNU General Public License as published by
the Free Software Foundation, either version 3 of the License, or
(at your option) any later version.
This work is distributed in the hope that it will be useful,
but WITHOUT ANY WARRANTY; without even the implied warranty of
MERCHANTABILITY or FITNESS FOR A PARTICULAR PURPOSE. See the
GNU General Public License for more details.
You should have received a copy of the GNU General Public License
along with this work. If not, see <http://www.gnu.org/licenses/>.

Video DAC design and SD voltage dividers contributed by Clay Cowgill.

Added Mini-DIN SCART connector and some cleanup by Thorsten Erdmann (Bluescreen@trektech.de)