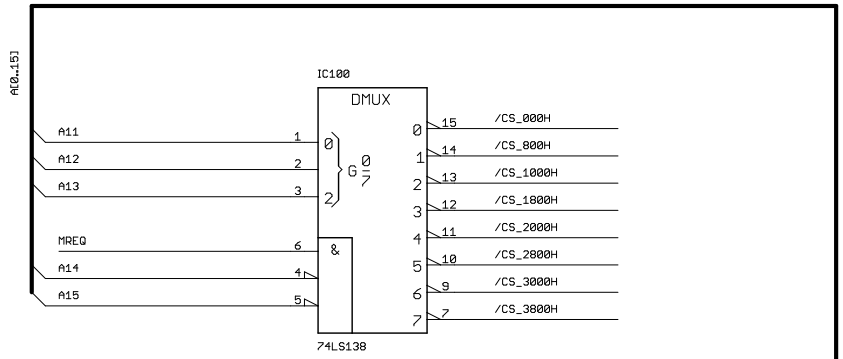

NOTE: hatched areas not fitted !

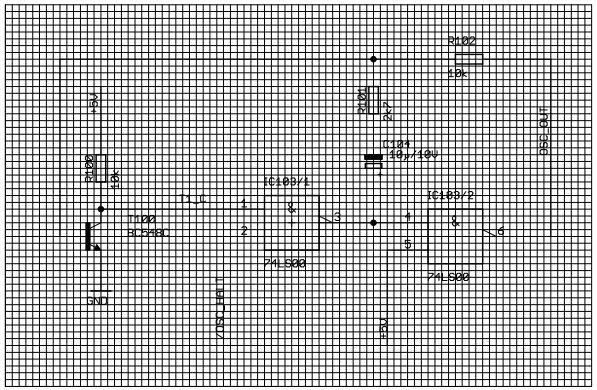

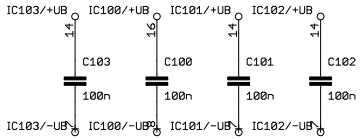

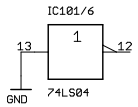

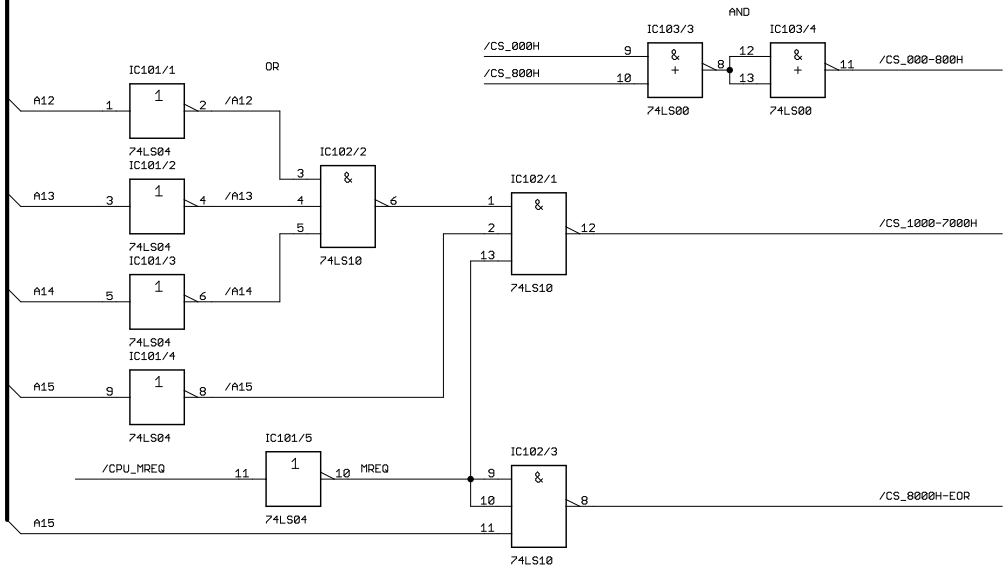

System TRAIN-Z: memory address decoder Copyright 2010 by Mario Blunk - electronics & IT engineering vist us at http://www.train-z.de	
TITLE: MMU_V101r3	
Document Number:	REV: 3
Date: 12/5/11 11:17 AM	Sheet: 1/4

BOOT PROM

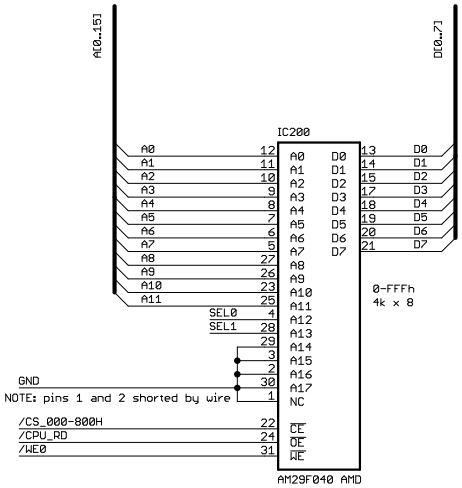

NOTE: IC200 may be AM29F040 (AMD)
or W29C020 (WINBOND) or equivalent

USER PROM

various device mounting possible

address ranges must not overlap !

see static RAM section !

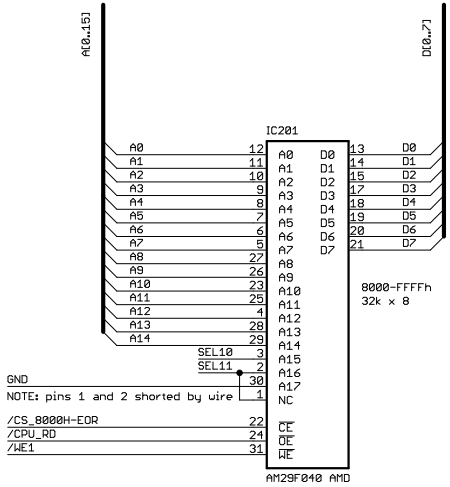

NOTE: IC201 may be AM29F040 (AMD)
or W29C020 (WINBOND) or equivalent
Please read manual for supported FLASH-device !

static RAM

various device mounting possible

address ranges must not overlap !

see user PROM section !

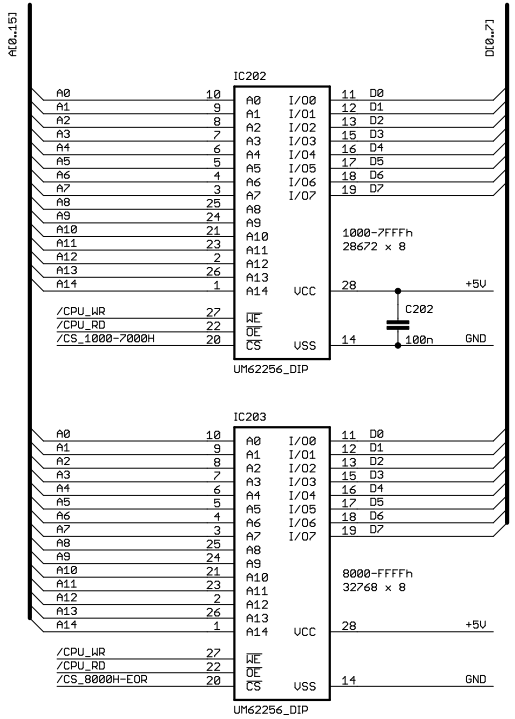

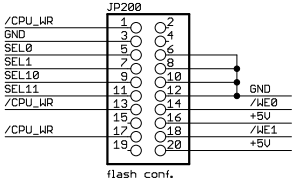

external write signal at 1-2
close 5-6 / 7-8 for boot flash bank select
close 9-10 / 11-12 for user flash bank select
close 13-14 for boot flash write enabled
close 14-16 for boot flash write protect
close 17-18 for user flash write enabled
close 18-20 for user flash write protect

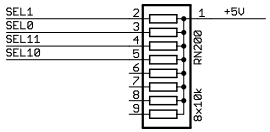

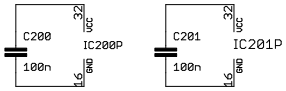

FLASH-EEPROM, static RAM

Copyright 2010 by Mario Blunk - electronics & IT engineering
vist us at http://www.train-z.de

TITLE: MMU_V101r3

Document Number:

REV: 3

Date: 12/5/11 11:17 AM

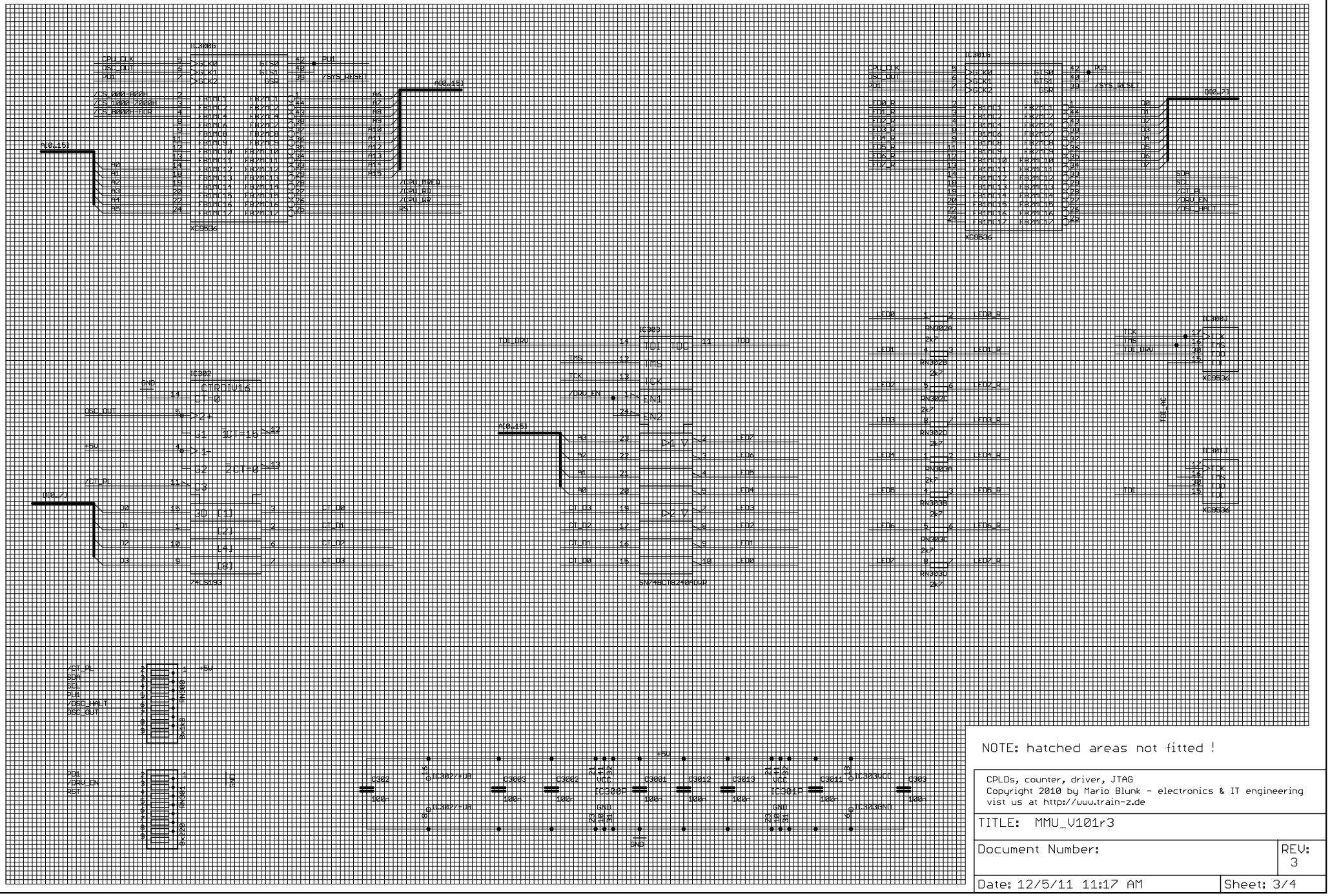

NOTE: hatched areas not fitted !

CPLDs, counter, driver, JTAG
Copyright 2010 by Mario Blunk - electronics & IT engineering
vist us at http://www.train-z.de

TITLE: MMU_V101r3

Document Number:

REV: 3

Date: 12/5/11 11:17 AM

Sheet: 3/4

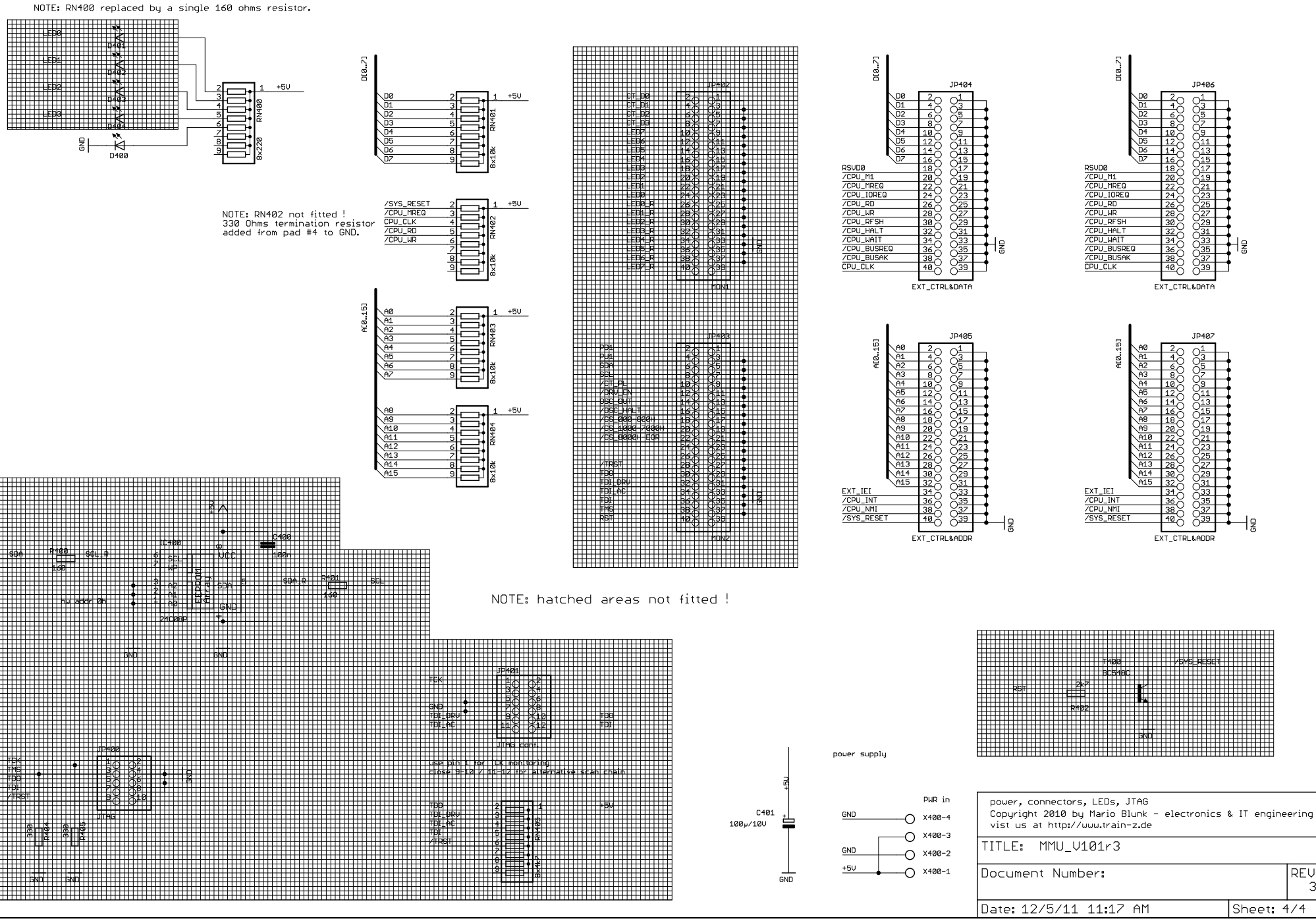

power, connectors, LEDs, JTAG

Copyright 2010 by Mario Blunk - electronics & IT engineering

vist us at http://www.train-z.de

TITLE: MMU_V101r3

Document Number:

REV: 3

Date: 12/5/11 11:17 AM

Sheet: 4/4