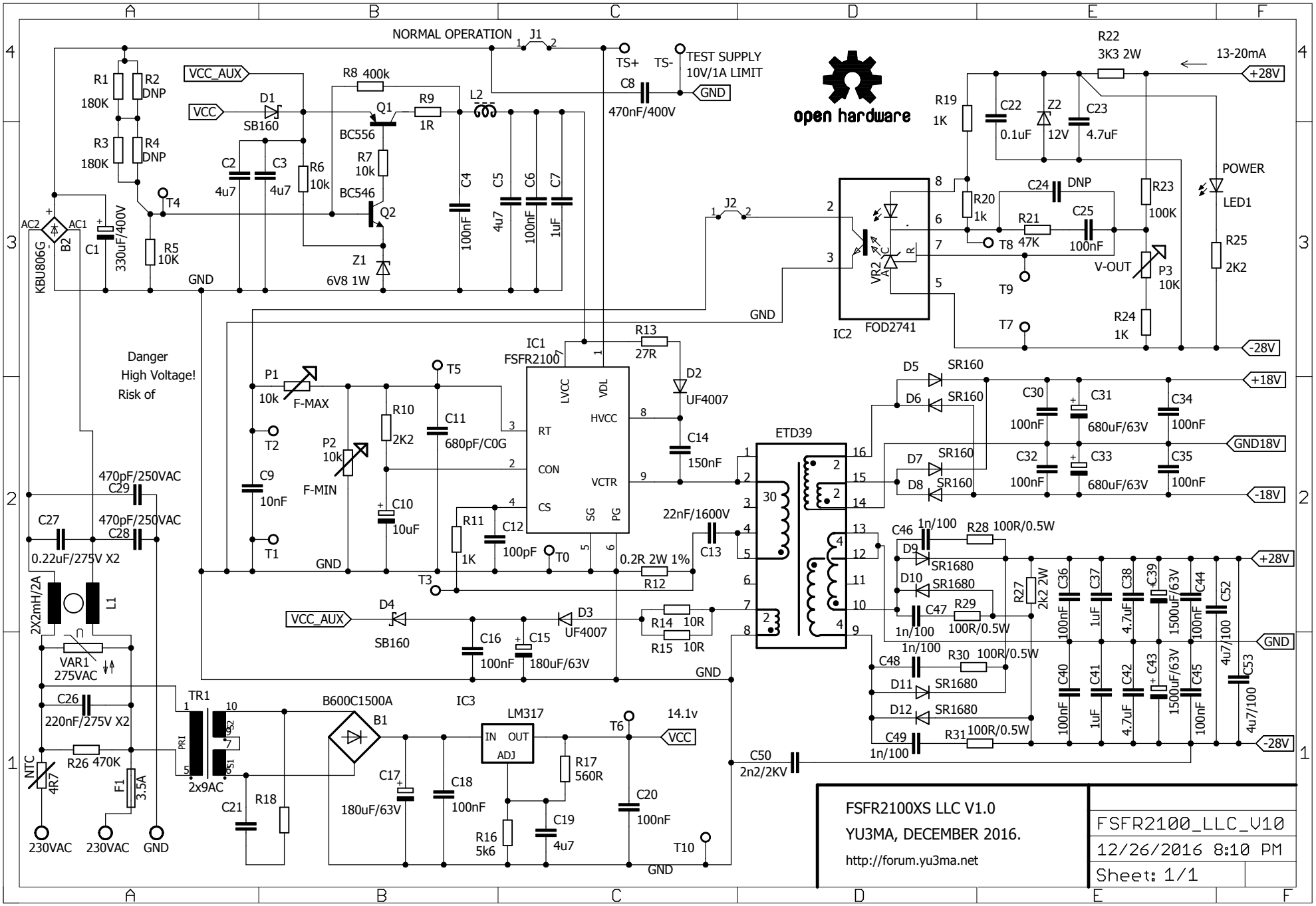
NORMAL OPERATION
J1
TS+
TS-
TEST SUPPLY
10V/1A LIMIT
GND
C8
470nF/400V
open hardware
R22
3K3 2W
13-20mA
+28V
VCC_AUX
R8 400k
R9
1R
L2
VCC
D1
SB160
Q1
BC556
R7
10k
BC546
Q2
Z1
6V8 1W
R6
10k
C2
4u7
C3
4u7
C4
100nF
C5
4u7
C6
100nF
C7
1uF
R1
180K
R2
DNP
R3
180K
R4
DNP
T4
R5
10K
AC2
AC1
B2
KBU806G
C1
330uF/400V
GND
R19
1K
C22
0.1uF
Z2
12V
C23
4.7uF
POWER
LED1
R20
1k
C24
DNP
R21
47K
C25
100nF
R23
100K
T8
T9
V-OUT
P3
10K
R25
2K2
R24
1K
T7
-28V
J2
IC2
FOD2741
VR2
Danger
High Voltage!
Risk of
IC1
FSFR2100
R13
27R
D2
UF4007
P1
10k
F-MAX
T5
R10
2K2
C11
680pF/C0G
LVCC
VDL
HVCC
RT
CON
VCTR
CS
SG
PG
C14
150nF
T2
P2
10k
F-MIN
C9
10nF
C10
10uF
R11
1K
C12
100pF
T0
22nF/1600V
C13
0.2R 2W 1%
R12
T1
T3
470pF/250VAC
C29
470pF/250VAC
C28
C27
0.22uF/275V X2
2X2mH/2A
L1
VAR1
275VAC
C26
220nF/275V X2
R26 470K
NTC
4R7
F1
3.5A
230VAC
230VAC
GND
D4
SB160
D3
UF4007
C16
100nF
C15
180uF/63V
R14 10R
R15 10R
TR1
PR1
SS2
SS1
2x9AC
B600C1500A
B1
IC3
LM317
IN
OUT
ADJ
T6
14.1v
VCC
C17
180uF/63V
C18
100nF
R17
560R
C20
100nF
C21
R18
R16
5k6
C19
4u7
T10
ETD39
D5
SR160
D6
SR160
D7
SR160
D8
SR160
C30
100nF
C31
680uF/63V
C34
100nF
+18V
GND18V
C32
100nF
C33
680uF/63V
C35
100nF
-18V
C46
1n/100
R28 100R/0.5W
D9
SR1680
D10
SR1680
C47
1n/100
R29
100R/0.5W
R27
2k2 2W
C36
100nF
C37
1uF
C38
4.7uF
C39
1500uF/63V
C44
100nF
C52
4u7/100
C48
1n/100
R30 100R/0.5W
D11
SR1680
D12
SR1680
C49
1n/100
R31 100R/0.5W
C40
100nF
C41
1uF
C42
4.7uF
C43
1500uF/63V
C45
100nF
C53
4u7/100
C50
2n2/2KV
FSFR2100XS LLC V1.0
YU3MA, DECEMBER 2016.
http://forum.yu3ma.net
FSFR2100_LLC_V10
12/26/2016 8:10 PM
Sheet: 1/1