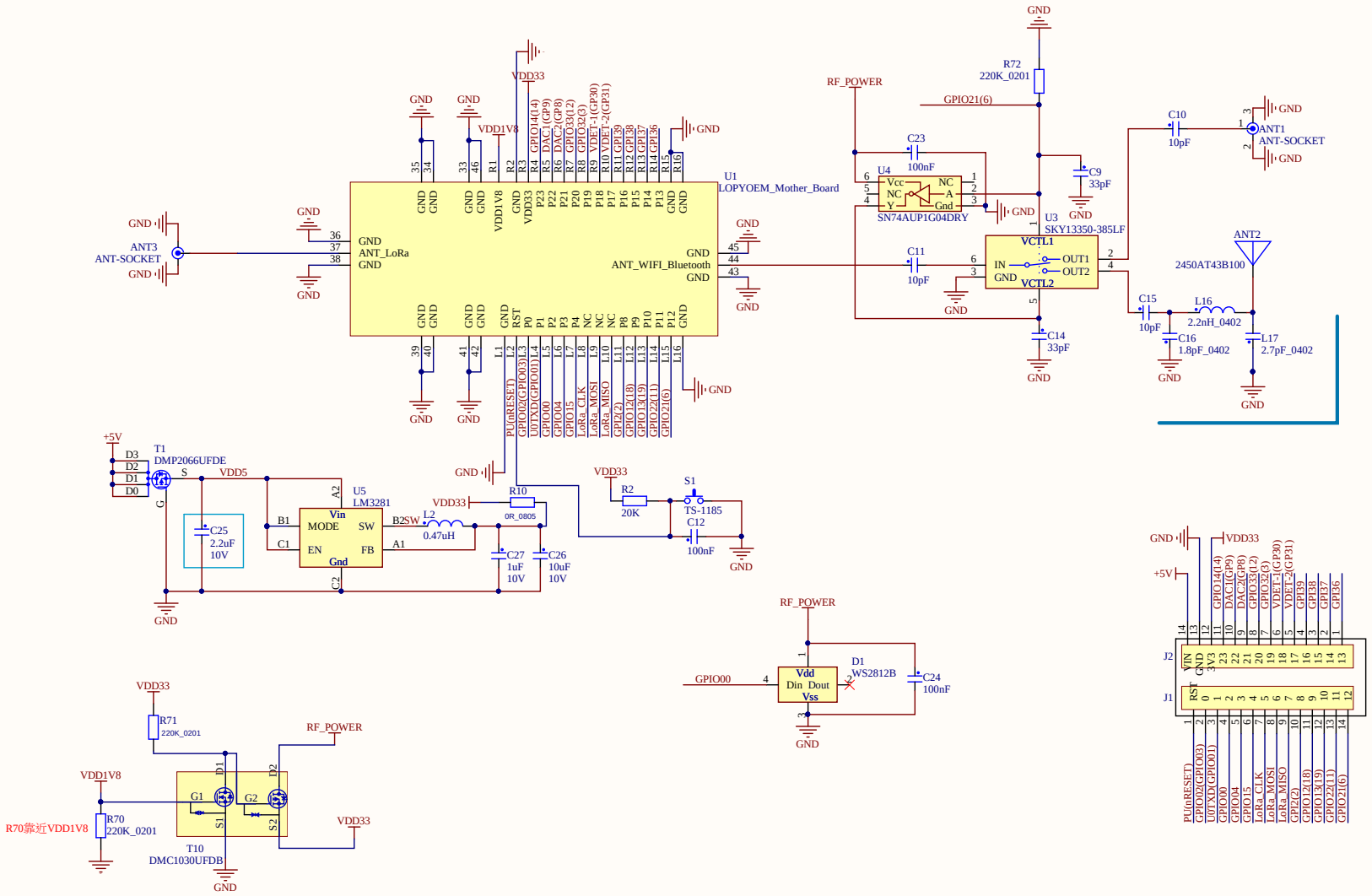

Company : In-tech Electronics Limited

Model: *		The information contained herein shall not be reproduced without the prior written by In-Tech Ltd	
Title: *			
Drawn: KC Cheung	Date: 2017/6/30	Doc no.: *	Version: *
Approved: Nicholas Tso	Date: 2017/6/30	File name: *	Sheet 1 of 2

Unless otherwise indicated, Printed Copies Are Uncontrolled.